Student Code Number_____

Department of Mechanical Engineering
Michigan State University

Solid and Structural Mechanics
Ph.D. Qualifying Exam

August 2014

Closed book and notes
You may use a one page (8.5x11) – one sided formula sheet.
All four questions are weighted equally.

Prepared by
Patrick Kwon
Tamara Reid Bush

1. A vertical pipe column with and outside diameter of D=9.0 inches and an inside diameter of d= 8.0 inches supports the loads shown. Determine the equivalent force system and represent it in a complete Free Body Diagram. Determine the principal stresses and the maximum shear stresses in *psi* (pounds per square inch) at point H. Make sure all equations are provided, and show your work for how you arrived at values for each variable in each equation. All axes are shown in the figure.

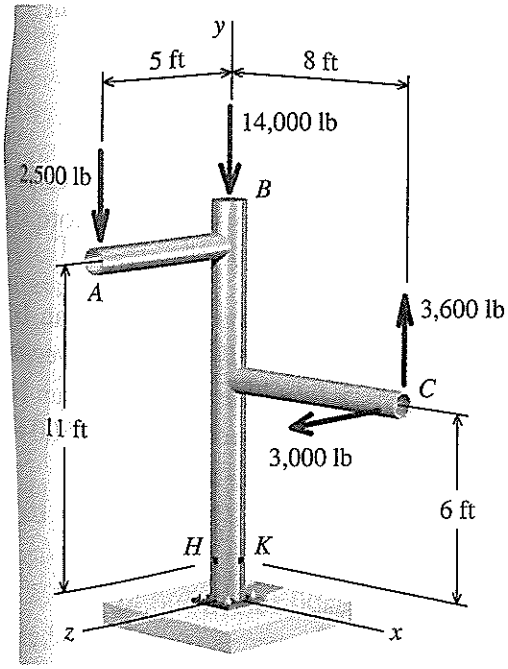

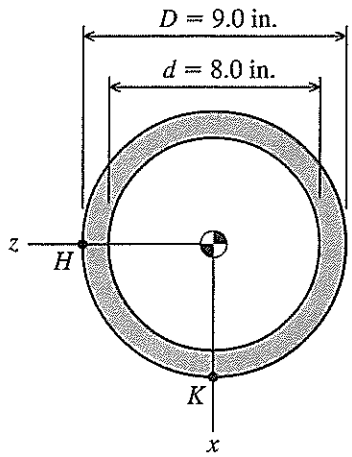

Column cross-sectional dimensions.

2. A propped catilever beam is loaded and supported as shown. Assume that EI is constant for the beam. Determine the reactions at supports A and B. Draw appropriate free body diagrams.

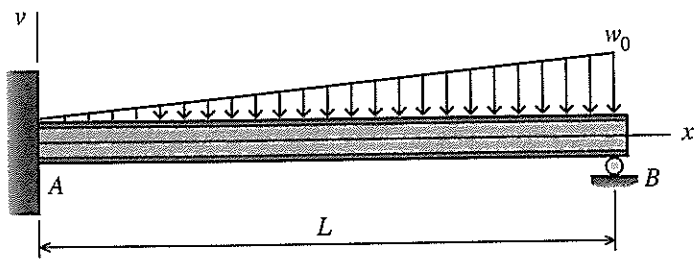

3. The bars below are arranged as a composite (aluminum core and steel) on one side. There is no slip between the bars. The diameter of aluminum is 4cm and the outside diameter of steel is 8cm. (a) Determine the reaction torques on both ends, (b) the maximum shear stresses in aluminum. Use G_{steel}=200GPa and $G_{Aluminum}$=70GPa.

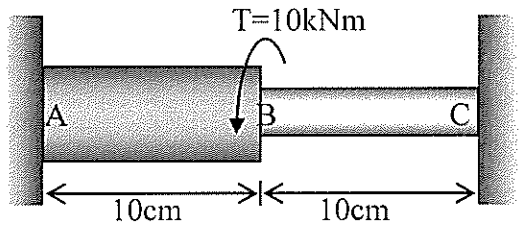

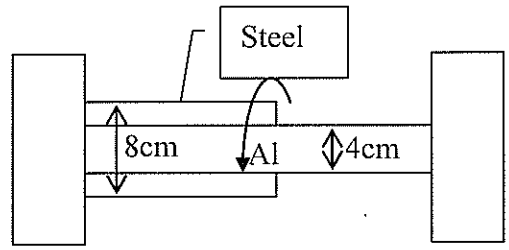

4. The strain rosette (0°, 45°, 90°) was mounted on a machine component. The strain gages read 500μ, 400 μ and -300 μ when the yielding has just occurred. The machine component is made of an alloy whose elastic modulus and Poisson's ratio are given to be 45GPa and 0.35, respectively. (a) Determine the strains (ε_x, ε_y, γ_{xy}) in x-y coordinates (b) Determine the stresses in assuming plane stress and (c) Determine the yield strength of the alloy.