Code Number :.....

THERMODYNAMICS QUALIFYING EXAM

August 2016

OPEN BOOK (only one book allowed) & CLOSED NOTES

Answer all four questions

All questions have equal weight

TIME: 3.0 hrs

Prepared by H.Schock & A. Engeda

.....

- **Take any required property from your book, approximate values if necessary.**
- **If you make any assumption to reach a solution state it clearly**

.....

Question # 1

To cool the air in a compressor and reduce the compression power, it is proposed to spray water mist at the compressor inlet. Assuming air is compressed isentropically at a rate of 2 kg/s from 300 K and 100 kPa to 1200 kPa and the water is injected at a temperature of 20°C at a rate of 0.2 kg/s.

Additional Assumptions:

a) Assume the water vaporizes completely before leaving the compressor, and assume an average mass flow rate of 2.1 kg/s throughout the compressor.
b) Assume:
    1. Air is an ideal gas with variable specific heats.
    2. The process is reversible.
    3. Kinetic and potential energy changes are negligible.
    4. Air is compressed isentropically.
    5. Water vaporizes completely before leaving the compressor.
    6. Air properties can be used for the air-vapor mixture.

Determine:

a) The reduction in the exit temperature of the compressed air, and
b) The compressor power saved as a result of the cooling.

Hint: *Calculate both cooled and uncooled compression process and compare performances.*

Question # 2a)

Consider the Rankine cycle below with steam flow rate of 5kg/s. The steam receives heat from the combustion gases in the furnace of the generator; assume the combustion gases change temperature from 2000^0K to 425^0K in flowing through the steam generator. The cooling water enters the condenser 20^0C and leaves at 40^0C. Assume the flow in the pump and the turbine is adiabatic and internally reversible. Also assume the combustion gas has the properties of air. If T_0 is 20^0C, determine the cycle irreversibility, I. The irreversibility I is give by:

$$\dot{I} = T_0 \left[\sum_i \left(\dot{m}_i s_i \right)_{out} - \sum_j \left(\dot{m}_j s_j \right)_{in} + \sum_i \frac{Q_i}{T_i} \right]$$

Question # 2b)

Show that the thermal efficiency of a combined gas–steam power plant η_{cc} can be expressed as:

$$\eta_{cc} = \eta_g + \eta_s - \eta_g \eta_s$$

where $\eta_g = W_g / Q_{in}$ *and* $\eta_s = W_s / Q_{g,out}$ are the thermal efficiencies of the gas and steam cycles, respectively. Where Q_{in} is the heat supplied to the gas cycle, where Q_{out} is the heat rejected by the steam cycle, and where $Q_{g,out}$ is the heat rejected from the gas cycle and supplied to the steam cycle.

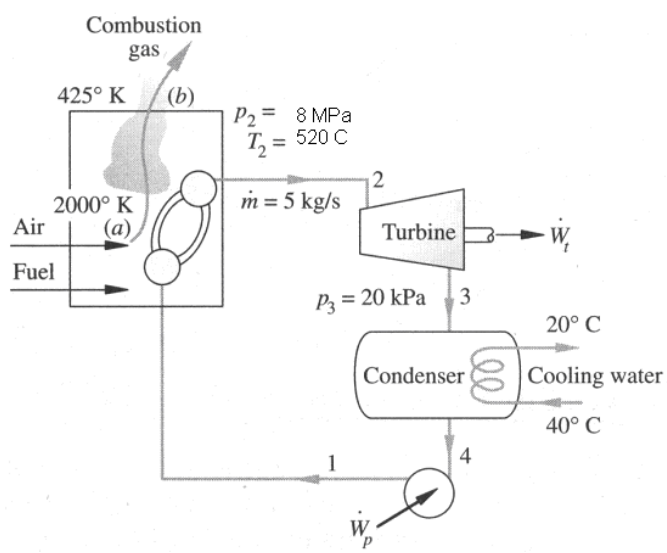

Figure for Question 2a

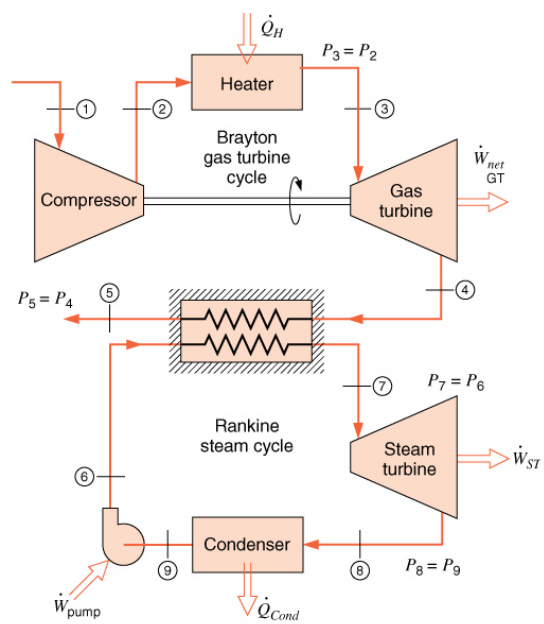

Figure for Question 2b

3. The products of combustion of a hydrocarbon fuel with air are analyzed with the following results

Component	**% by Volume**
CO_2	10.4
CO	0.1
H_2O	11.8
O_2	3.4
N_2	74.3

This gas mixture passes through a SSSF heat exchanger at ambient pressure at the rate of 0.1 kgls. What is the dew-point temperature? If the mixture is cooled to 10°C below the dew point temperature, how long will it take to collect 5kg of water?

4. A small engine is found to have an output of 1kw. The temperature of the products of combustion are found to be 650 °K. The products are analyzed with the following results on a dry basis

CO_2	11.4%
CO	2.9%
O_2	1.6%
N_2	84.1%

Consider the fuel to be liquid octane. The fuel and air enter the engine at 25°C. The fuel flow rate is 0.50 kg/hr.

Determine

a.) The rate of heat transfer from the engine

b.) The efficiency of the engine