Student Code Number: _____

Ph.D. Qualifying Exam

SOLIDS & STRUCTURAL MECHANICS

Spring 2014

Prof. P. Kwon
Prof. T. Reid-Bush

Directions: Closed book and notes, you may use a one page (8.5x11) – one sided formula sheet..

Answer all four questions are weighted equally

Time: 3.0 hrs.

Determine the reaction forces in sections, AB, AC and AD and displacements at A, C and D of the bar shown below. Please indicate the direction of displacements (up or down). The section AB is made of a tube with outer and inner diameters of 6cm and 3cm, respectively. The section B has been mounted on rigid wall as shown. In the diagram, the sections AC and AD are made of a 2cm diameter solid bar and connected by the rigid bar (shown at A). The elastic modulus is 20GPa.

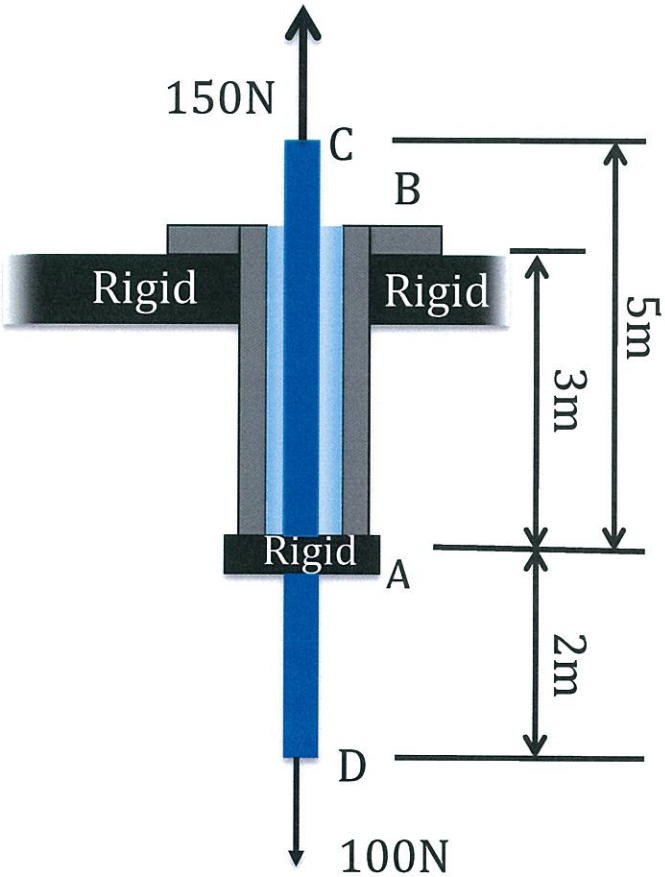

A cylindrical pressure vessel whose radius and thickness are 20cm and 2cm, respectively, is carrying 2MPa of pressure. The vessel is made with the material that has E=30GPa and υ=0.3. A strain gage is mounted at 45° to monitor the pressure. Determine the reading on the strain gage.

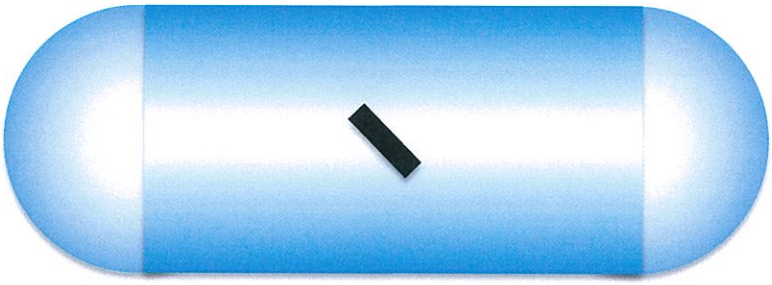

For full credit, all work must be shown. Free Body Diagrams must also be included for full credit.

3. Several forces are applied to the pipe assembly shown. Knowing that the inner and outer diameters of the pipe are equal to 1.50 inches and 1.75 inches respectively, determine a) the forces and moments acting at point H located at the top of the outside surface of the pipe , b) the principal planes and the principal stresses at H, b) the maximum shearing stress at the same point.

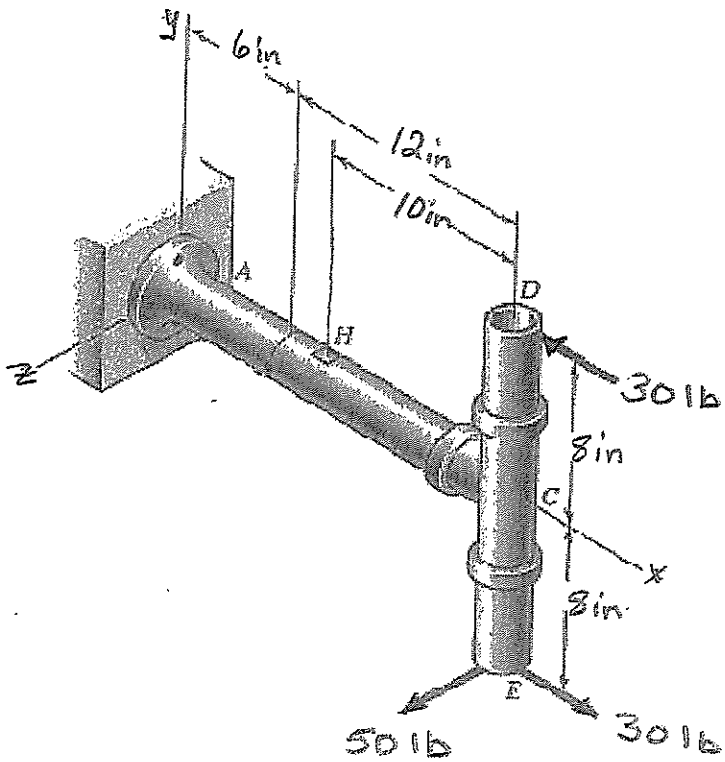

4. For the beam and loading shown, determine the equation of the elastic curve, the deflection at B and the deflection at C.

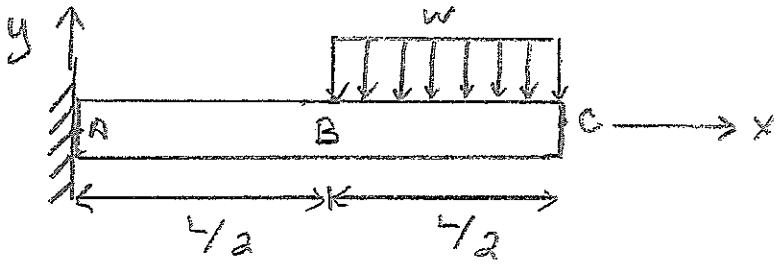

Determine the reaction forces in sections, AB, AC and AD and displacements at A, C and D of the bar shown below. Please indicate the direction of displacements (up or down). The section AB is made of a tube with outer and inner diameters of 6cm and 3cm, respectively. The section B has been mounted on rigid wall as shown. the sections AC and AD are made of a 2cm diameter solid bar and connected by the rigid bar(shown at A). The elastic modulus is 20GPa.

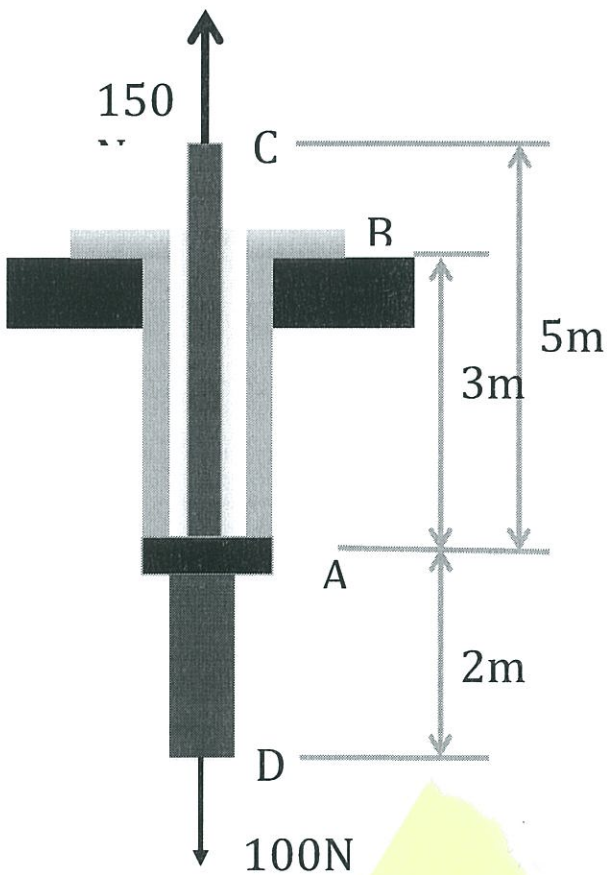

R_{AB}=50N

R_{AC}=150N

R_{AD}=100N

$$\sigma_{AB} = \frac{-50}{\pi\left(0.03^2 - 0.015^2\right)}$$

$$\sigma_{AC} = \frac{150}{\pi\left(0.01^2\right)} = 477.5kPa$$

$$\sigma_{AD} = \frac{100}{\pi\left(0.01^2\right)} = 318.3kPa$$

$$\sigma_\theta = \frac{P\ r}{t} = \frac{2(20)}{2} = 20MPa$$

$$\sigma_z = \frac{P\ r}{2t} = \frac{2(20)}{4} = 10MPa$$

$$\varepsilon_r = \frac{\sigma_r}{E} - \nu\frac{\sigma_\theta}{E} - \nu\frac{\sigma_z}{E} = -0.3\left(\frac{20}{30} + \frac{10}{30}\right) = -300\mu$$

$$\varepsilon_\theta = \frac{\sigma_\theta}{E} - \nu\frac{\sigma_r}{E} - \nu\frac{\sigma_z}{E} = \frac{20}{30} - 0.3\frac{10}{30} = 566.7\mu$$

$$\varepsilon_z = \frac{\sigma_z}{E} - \nu\frac{\sigma_\theta}{E} - \nu\frac{\sigma_r}{E} = \frac{10}{30} - 0.3\frac{20}{30} = 133.3\mu$$

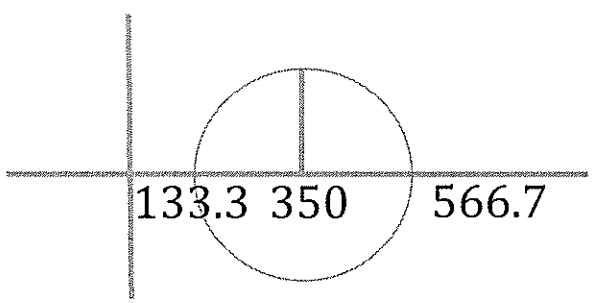

Reading on Strain gage =350μ

$r_o = c_o = \frac{1.75}{2} = .875$

$r_i = c_i = \frac{1.5}{2} = .750$

$F_z = 50$ lb

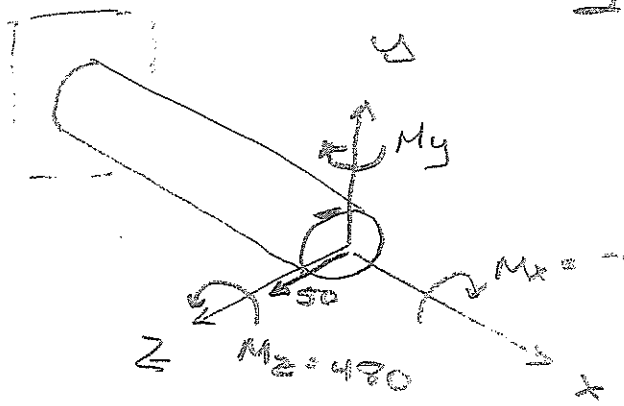

$M_z = +30(8) + 30(8)$
$= 480$

$T = M_x = -50(8) = -400$

$M_y = 50(10) = -500$

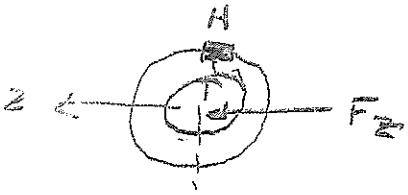

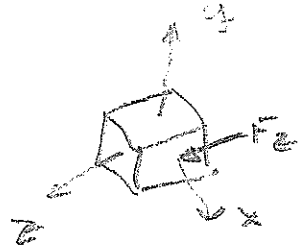

$J = \frac{\pi}{2}(.875^4 - .75^4)$
$= .4237 \text{ in}^4$

Bending

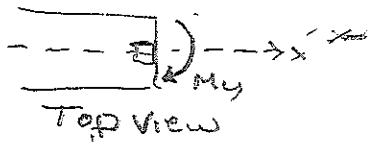

N is on Neutral Axis
so σ_x due to $M_y = 0$

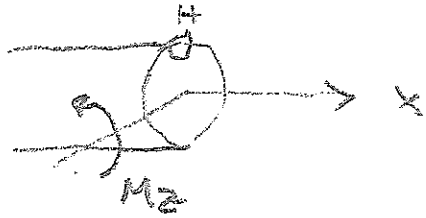

compressive

$$\sigma_x = -\frac{M_z y}{I} = \frac{-480(.875)}{.2118}$$

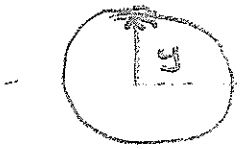

$I = \frac{1}{2} J = .2118 \text{ in}^4$

$y = .875$

$$\boxed{\sigma_x = -1982 \frac{\text{lb}}{\text{in}^2}}$$

Torsion

$$\tau = \frac{Tc}{J}$$

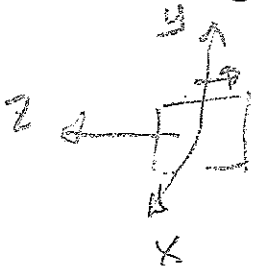

$$\tau_{xz} = \frac{-400(.875)}{.4237}$$

$$= -825.9 \frac{\text{lb}}{\text{in}^2}$$

Shear: $\tau_{xz} = \dfrac{VQ}{It} = \dfrac{50(.1654)}{.2118(.250)}$

$t = 2(.875 - .75) = .250$

$\boxed{\tau_{xz} = 151 \ \frac{lb}{in^2}}$

$Q = \bar{y} \cdot \text{Area}$

$\bar{y} = \dfrac{4r_o}{3\pi} - \dfrac{4r_i}{3\pi}$

$\text{Area} = \frac{1}{2}\pi r_o^2 - \frac{1}{2}\pi r_i^2$

$Q = 2/3(r_o^3 - r_i^3) = .1654$

$\sigma_x = -1982 \ \frac{lb}{in^2}$ $\qquad \tau_{xz} = 151 - 825.9 = -674.9$

$\sigma_y = 0$

$\sigma_z = 0$

$\tan 2\theta_p = \dfrac{2\tau}{\sigma_z - \sigma_x} = \dfrac{2(-674.9)}{0 + 1982}$

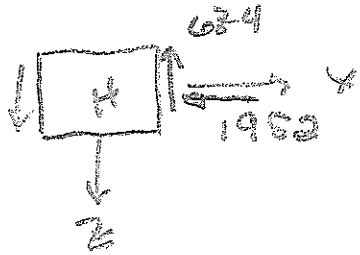

$\tan 2\theta_p = -.681$ $\qquad \theta_p = -17.1$ or $73°$

$\sigma_{AVE} = \frac{1}{2}(\sigma_z + \sigma_x) = \frac{1}{2}(0 - 1982) = -991$

$R = \sqrt{\left(\dfrac{\sigma_z - \sigma_x}{2}\right)^2 + \tau^2} = \sqrt{991^2 + (674.9)^2} = 1198 \ \frac{lb}{in^2}$

$\sigma_1 = \sigma_{AVE} + R = 207.9$

$\sigma_2 = \sigma_{AVE} - R = -2187$ $\qquad \tau_{MAX} = R = 1198$

For the beam and loading shown, determine a) equation of the elastic curve b) the deflection at B c) the deflection @ C.

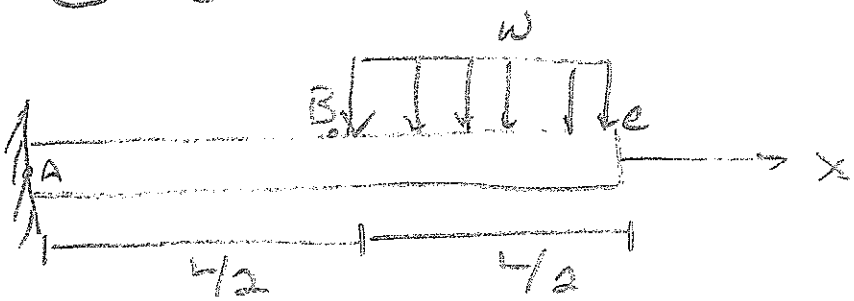

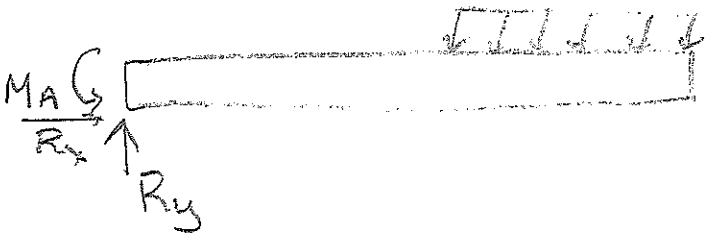

B.C.

$x = 0, \ \frac{dy}{dx} = 0$

$x = 0, \ y = 0$

$\Sigma F_x = 0$

$R_x = 0$

$\Sigma F_y = 0$

$R_y - w\left(\frac{L}{2}\right) = 0 \qquad R_y = \frac{wL}{2}$

$\circlearrowleft + \ \Sigma M_A = 0$

$M_A - w\left(\frac{L}{2}\right)\left(\frac{3}{4}L\right) = 0 \qquad M_A = \frac{3}{8}wL^2$

Section Beam $\quad 0 < x < L/2$

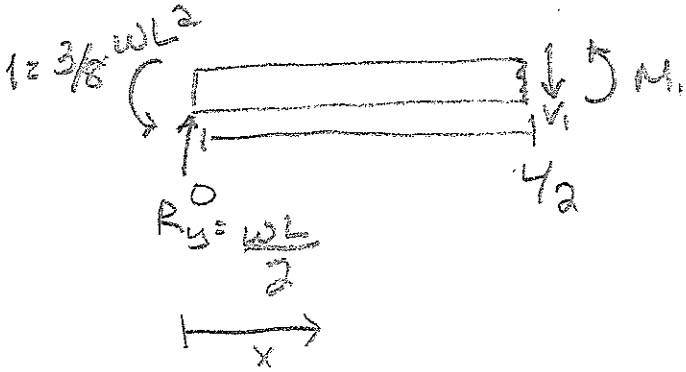

$\circlearrowleft + \ M_{cut} = 0$

$M_1 - \frac{wL}{2}(x) + 3/8\, wL^2$

$M_1 = \frac{wLx}{2} - 3/8\, wL^2$

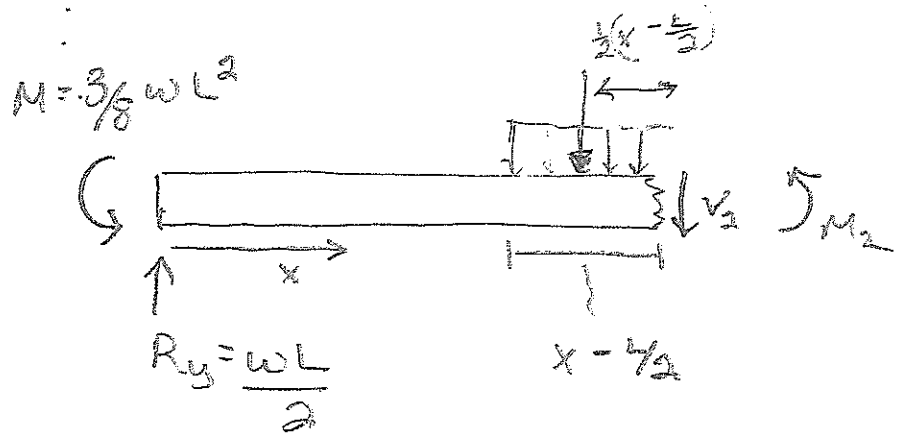

$L/2 < x < L$

$\circlearrowleft + \sum M_2 = 0$

$$3/8\, wL^2 - R_y(x) + w(x - L/2)\overbrace{(x - L/2)\tfrac{1}{2}}^{\text{Dist from end}} + M_2 = 0$$

$$3/8\, wL^2 - R_y(x) + 1/2\, w(x - L/2)^2 + M_2 = 0$$

$$M_2 = -3/8\, wL^2 + \frac{wL}{2}x - 1/2\, w(x - L/2)^2$$

use singularity functions

$$EI\frac{d^2y}{dx^2} = M = -3/8\, wL^2 + \frac{wLx}{2} - \overbrace{1/2\, w\langle x - \tfrac{L}{2}\rangle^2}^{\text{for } L/2 < x < L}$$

$$EI\frac{dy}{dx} = -3/8\, wL^2 x + \frac{wLx^2}{4} - \frac{1}{6} w\langle x - \tfrac{L}{2}\rangle^3 + C_1$$

B.C. $\underline{x = 0}$ $\frac{dy}{dx} = 0$ $x < L/2$ $\langle\ \rangle$ goes to 0

$0 = 0 + 0 + 0 + C_1$ $C_1 = 0$

$$EIy = -\frac{3}{16}wL^2x^2 + \frac{wLx^3}{12} - \frac{1}{24}w\langle x - \frac{L}{2}\rangle^4 + C$$

B.C.

$x = 0,\ y = 0$

$$0 = 0 + 0 + 0 + C_2 \qquad C_2 = 0$$

a). Elastic curve

$$y = \frac{w}{EI}\left(-\frac{3}{16}L^2x^2 + \frac{Lx^3}{12} - \frac{1}{24}\langle x - \frac{L}{2}\rangle^4\right.$$

$$\theta = \frac{dy}{dx} = \frac{w}{EI}\left(-\frac{3}{8}L^2x + \frac{Lx^2}{4} - \frac{1}{6}\langle x - \frac{L}{2}\rangle^3\right)$$

b) Deflection @ B. - find y @ $x = L/2$

$$y_B = \frac{wL^4}{EI}\left(-\frac{3}{16}\left(\frac{1}{4}\right) + \frac{1}{12}\left(\frac{1}{8}\right)\right) = \frac{wL^4}{EI}\left(\frac{-7}{192}\right)$$

$$-\frac{3}{64} + \frac{1}{96} =$$

c) Deflection @ C = L

$$\langle L/2\rangle^4 = \frac{L^4}{16}$$

$$y = \frac{w}{EI}\left(-\frac{3}{16}L^4 + \frac{L^4}{12} - \frac{1}{24}\langle L - L/2\rangle^4\right)$$

$$\frac{wL^4}{EI}\left(-\frac{3}{16} + \frac{1}{12} - \frac{1}{24}\left(\frac{1}{16}\right)\right) = -\frac{41}{384}\frac{wL^4}{EI}$$