August 2011

Exam Number: ----------

Department of Mechanical Engineering

Michigan State University

Solid and Structural Mechanics
Ph.D. Qualifying Examination

August 2011

One page of formulas and notes are allowed
All Questions are weighted equally.

Prepared by

Farhang Pourboghrat
Al Loos

Q.1 – The backhoe is controlled by the three hydraulic cylinders, and, in the particular position shown, the hoe can apply a horizontal force P = 10kN. Neglect the masses of the members and compute the magnitude of the forces supported by the pins at $\boldsymbol{A}$ and $\boldsymbol{E}$.

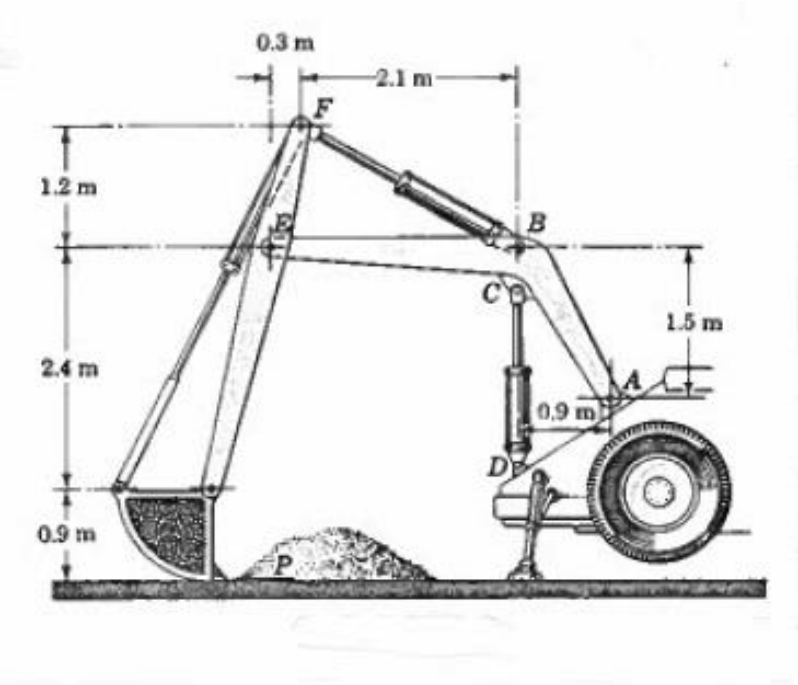

Q.2 – The length of the 2-mm-diameter steel wire *CD* has been adjusted so that with no load applied, a gap of 1.5 mm exits between the end *B* of the rigid beam *ACB* and the contact point *E*. Knowing that E = 200 GPa, determine where a 20-kg block should be placed on the beam in order to cause contact between *B* and *E*.

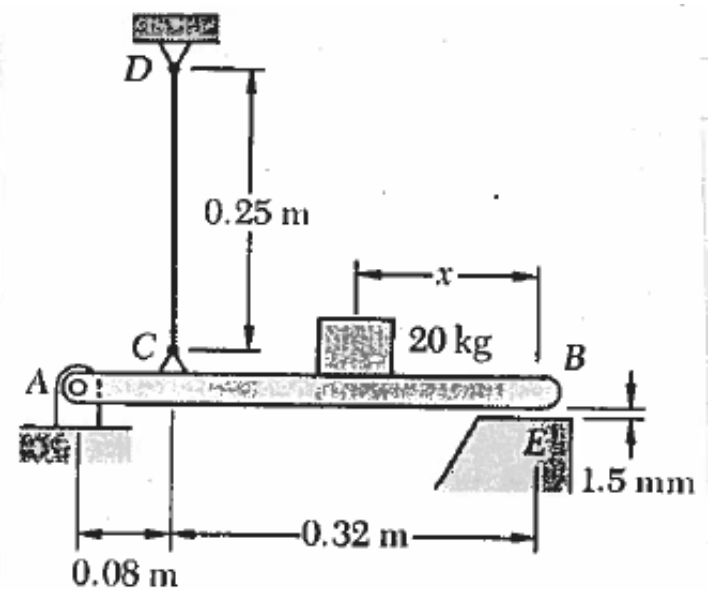

Q.3 – A 75-kip·in. torque is applied to the end of the tank containing oil under a pressure of 400 psi. Knowing that the tank has a 10-in. outside diameter and a ¼ -in. wall thickness, determine the maximum normal stress and the maximum shear stress in the cylindrical wall of the tank.

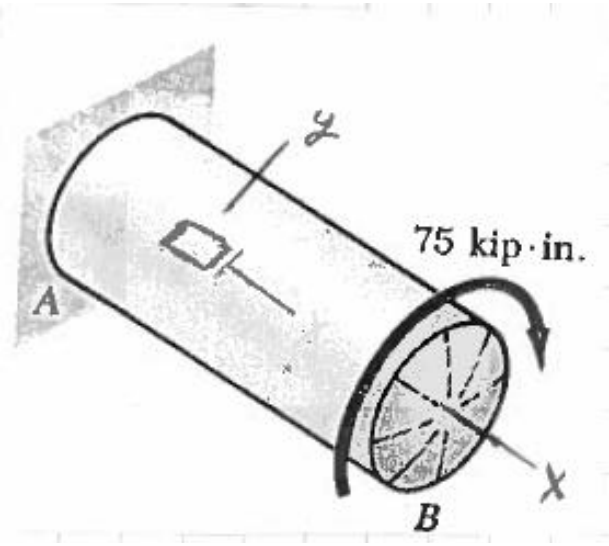

Q.4 – An aluminum rod 3/4” in diameter and 48” long and a steel rod 1/2” in diameter and 32” long are spaced 60” apart and fastened to a horizontal beam that carries a 2000 lb load, as shown in the sketch. The beam AB is to remain horizontal after the load is applied. Assume that the beam is weightless and absolutely rigid. Find the location “x” of the load and determine axial stresses in each rod.

$$E_{Al} = 1.e^{7}\ psi \quad , \quad E_{St} = 3.e^{7}\ psi$$

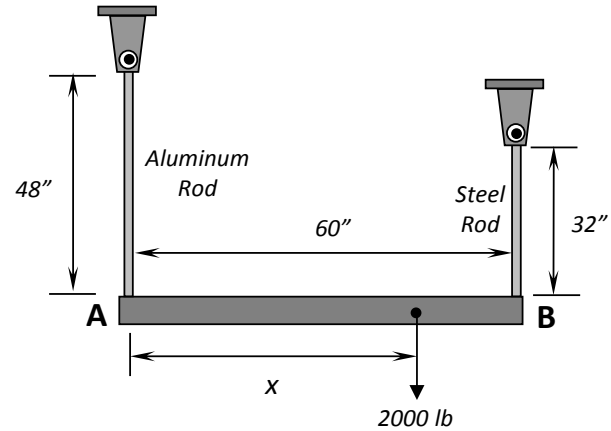

Q.5 – The $4.5\,ft$ concrete post is reinforced with seven (7) steel bars, each with a $1.125\,in$ diameter. Knowing that $E_s = 29.e^6\ psi$ and $E_c = 4.2\,e^6\ psi$, determine the normal stresses in the steel and in the concrete when a $350\,kip$ axial centric force P is applied to the post. (Note: one *kip* equals 1,000 pound-force.)

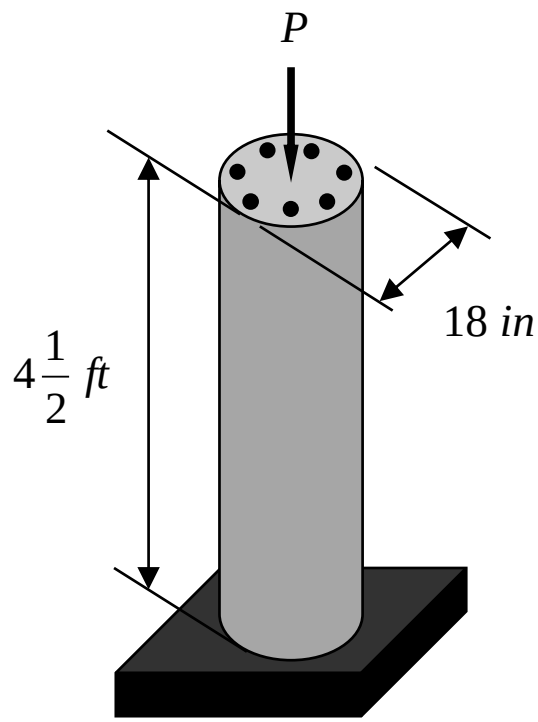

Q.6 – The stress state in the elliptical cylinder shown in the figure below is given with respect to the Cartesian axes Oxyz as:

$$\sigma_{ij} = \begin{bmatrix} zx^2 & 2xy & 0 \\ 2xy & y^2 & 2yz \\ 0 & 2yz & 0 \end{bmatrix}$$

Determine the stress vector acting at the point P(-1,1,2) on the plane that is tangent to the cylindrical surface, $x^2 + 4y^2 = 4$