Exam Number: ----------

Department of Mechanical Engineering

Michigan State University

Solid and Structural Mechanics
Ph.D. Qualifying Examination

August 2016

Closed Book and Notes
You may use a one page (8.5x11) - **one sided** formula sheet.
All four questions are weighted equally.

Prepared by
Dr. Dahsin Liu
Dr. Seungik Baek

1. An L-shaped beam **RST** shown below has a diameter d of 2” and is parallel to x-y plane. If the beam is fixed at **R** and loaded with a force P=100 *lbs* parallel to z-axis at **T**. Find the stresses (in terms of π) at points A and B on the cross-section 10” from the fixed end.

<u>Detailed view</u> <u>Cross-section of interest</u> <u>Simplified view</u>

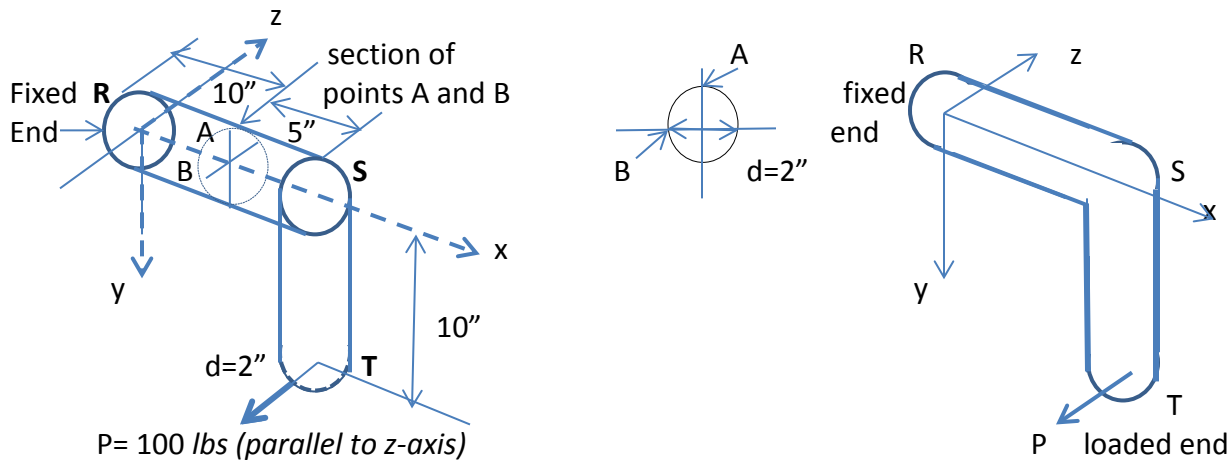

$\sigma = My/I$ $\tau = VQ/Ib$ $\tau = Tr/J$ $I = \pi r^4/4$ $J = \pi r^4/2$ Q= 1st moment of area

Stress element for point A on xz plane

Stress element for point B on xy plane

2. The critical load to cause buckling in a column can be calculated based on $P_{cr} = \pi^2 EI/(kL)^2$ where E is Young's modulus, I is the second moment of area, L is the effective length of the column while k is a constant depending on the boundary condition. Given below is a summary of k values under various boundary conditions.

   k= 2 for columns with one end free and the other fixed
   k= 1 for columns with both ends simply-supported
   k=0.7 for columns with one end simply-supported and the other fixed
   k= 0.5 for columns with both ends fixed

   Find the critical buckling load for the following column which is made of a material with $E = 10^7$ psi and effective dimensions L= 10", H=3" and W=6". Both the top and the bottom ends are pin-clamped as shown in the diagram.

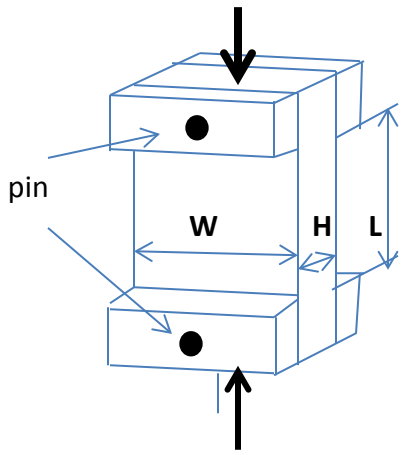

3. The strains determined by the use of the rosette shown during the test of a machine element are $\varepsilon_1 = +600\mu$, $\varepsilon_2 = +450\mu$, and $\varepsilon_3 = -75\mu$.

-Determine the in-plane principal strains: ε_x, ε_y, and γ_{xy}.

-Determine the in-plane maximum shearing strain.

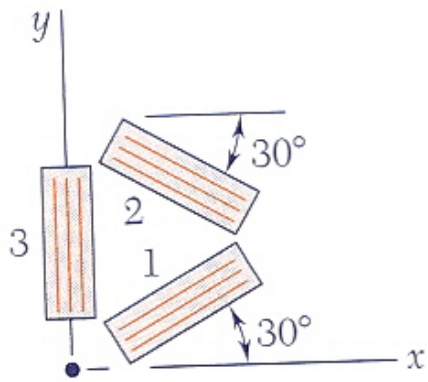

4. For the beam shown, determine the reaction at the roller support when w_o=65 kN/m.