ME Bulletin

News for Mechanical Engineering Majors

Vol. 58, No. 1 ME Advising Office • 2560 EB • 355-3338 Fall, 2020

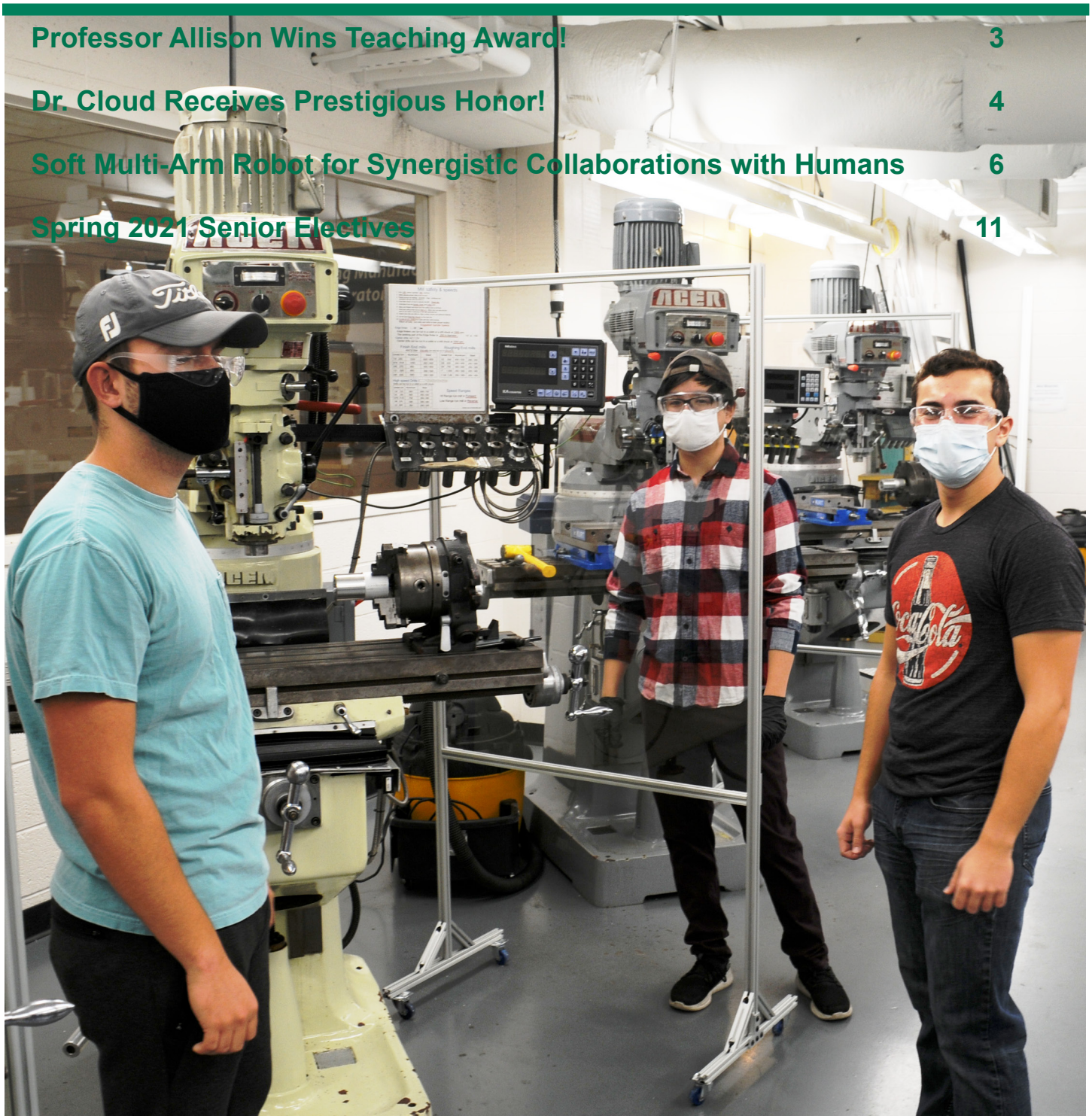

Due to the COVID-19 pandemic, ME 372-Machine Tool Laboratory, a Manufacturing Concentration requirement, is one of only two on-campus undergraduate courses this semester (the other is ME 425). Note the masks, plastic screen, and social distancing. Pictured are Cody Zorn, Anthony Su, and Delano Dalfonsi.

Teaching Award Nomination Form:

ME Juniors & Seniors Select Dr. Allison for the 2020 Withrow Award!

Professor Patton Allison received the 2020 Withrow Teaching Excellence Award last spring. He was presented with an inscribed plaque, a medallion, and a small stipend. Each year a committee consisting of student representatives from ASME and Pi Tau Sigma reviews nominations from ME juniors and seniors and makes the selection.

Dr. Allison, assistant professor in the Department of Mechanical Engineering, has been a driving force behind the success and popularity of the undergraduate concentration in aerospace engineering. "Knowledgeable and passionate" are just two of the traits most commonly cited by his students. Dr. Allison joined the ME department in 2017 and directs the Advanced Diagnostics and Combustion Lab, a place to start fires, shoot lasers, take pictures and learn about fire and flames. Some of his students are headed to graduate school because of his important influence on them. Those who are entering the aerospace industry directly after graduating feel that they are truly prepared for that experience because of the way in which he has guided their progress and depth of understanding.

As one student said: "he is a dedicated professor who truly explains his courses," allowing his students to see not only the information that needs to be learned but its connection to the practice of engineering. He is available and enthusiastic to engage students in learning beyond the required course material. Students consistently comment that "he really cares about his students and the subjects he teaches. His passion provides the necessary platform for students to enjoy learning."

This semester Dr. Allison is teaching ME 440. He is passionate about cooking, mixology, and learning about food science. In addition, he enjoys travel and film.

❖❖❖❖❖

Nominate

a professor for the 2021 Withrow Teaching Excellence Award!

Deadline: Friday, Nov. 13

To access the Nomination Form:

1) Go to the ME Website:

https://www.egr.msu.edu/me/

2) Click on Undergraduate

3) Click on Forms and Policies

4) Select Withrow Nomination

THANKS!

ME Bulletin

The *ME Bulletin* is published twice a year (fall & spring) for sophomores, juniors, seniors, faculty, and staff of the Department of Mechanical Engineering. Photographs were taken by Craig Gunn unless noted otherwise.

Send all correspondence to:
Gaile Griffore, Newsletter Editor
Dept. of Mechanical Engineering
Michigan State University
2560 Engineering Building
East Lansing, MI 48824-1226
Telephone: 517-355-3338
griffore@egr.msu.edu

In This Issue

Deadline: Nov 13

Tutoring

•**The ME Learning Center** (https://me.msu.edu/me-learning-center)has free mentors for ME 201, 222, and 361. It is open at 6-10 p.m. on Sunday through Thursday.

•**Paid Undergraduate Tutors** are available for many ME courses. Students in need of tutoring help for a particular course are matched with fellow students who have performed well in that course. Payment is negotiated privately between the tutor and the student within appropriate limits. For help, go to: https://sites.google.com/view/msu-tbp-pts-tutoring-database/home

•**The Guided Learning Center** (GLC) offers free drop in tutoring in math up to differential equations, science courses (chemistry, physics, etc.), and many core engineering courses. To request assistance, go to: https://www.egr.msu.edu/dpo/academics/guided-learning-center [Scroll down and click on application form]

•**The Cornerstone & Residential Experience (CoRe) Program** offers free tutoring on Sunday through Thursday from 6 - 10 pm. It provides help for MTH 132, 133; 234, and 235, CEM 141, and PHY 183 and 184. It is located here: https://core.egr.msu.edu/#section3 [Scroll down to CoRe Tutoring]

•**ME Graduate Student Tutors** can be contacted through the ME Advising Office. These tutors charge a fee, which you can negotiate with them. If you are interested, email **Gaile Griffore** at griffore@egr.msu.edu

History of the Withrow Teaching Excellence Award

Prior to 1991, ME was the only department in the College of Engineering with an annual teaching award, and it was called the ME Outstanding Faculty Award. In 1991 ME alumnus **Jack Withrow** and his wife **Dortha** endowed the award and made it available to all engineering departments. The name was changed to the Withrow Teaching Excellence Award. The Withrows also endowed several additional awards to recognize distinguished scholarship and service by engineering faculty and staff. Here is a list of past teaching award recipients, including those who transferred to ME from the old Materials Science and Mechanics (MSM) department in 2001:

1984	*Ronald Rosenberg*
1985	*Charles St. Clair*
1986	*Merle Potter*
1987	*Craig Somerton*
1988	*Ronald Rosenberg*
1989	*Charles St. Clair*
1990	*Alan Haddow*
1991	*Manooch Koochesfahani*
	Thomas Pence (MSM)
1992	*Craig Somerton*
	Gary Cloud (MSM)
1993	*John McGrath*
1994	*Alan Haddow*
	Dahlin Liu (MSM)
1995	*Brian Feeny*
1996	*John Foss*
	Robert Hubbard (MSM)
1997	*Alex Díaz*
1998	*Craig Somerton*
1999	*Indrek Wichman*
2000	*Ronald Rosenberg*
	Patrick Kwon (MSM)
2001	*Alan Haddow*
2002	*Farhang Pourboghrat*
2003	*Craig Somerton*
2004	*Gary Cloud*
2005	*Clark Radcliffe*
2006	*Ahmed Naguib*
2007	*Ranjan Mukherjee*
2008	*Giles Brereton*
2009	*Tonghun Lee*
2010	*Indrek Wichman*
2011	*Scott Kiefer*
2012	*Laura Genik*
2013	*Brian Thompson*
2014	*Tamara Reid Bush*
2015	*Neil Wright*
2016	*Rebecca Anthony*
2017	*Geoffrey Recktenwald*
2018	*Tamara Reid Bush*
2019	*Brian Feeny*
2020	*Patton Allison*

❖❖❖❖❖

Academic Advising

1) **ME Juniors and Seniors** are advised by **Gaile Griffore**. For an appointment, call 517-355-3338.

2) **ME Sophomore Juniors-to-Be with a 3.1 or higher GPA** are advised by **Gaile Griffore**. For an appointment, call 355-3338.

3) **ME Sophomores** who do not fit the criteria in number 2 above are advised by **Jeffrey Tsang**. Schedule an appointment with him at: https://login.msu.edu/?App=Shibb-SSC-GradesFirst

4) **ME Freshmen** are advised by **Jeffrey Tsang**. Schedule an appointment with him at: https://login.msu.edu/?App=Shibb-SSC-GradesFirst

MICHIGAN STATE UNIVERSITY Design Day COLLEGE OF ENGINEERING

Friday, December 11, 2020

Come and see our students lead, create, and innovate

- Competitions
- Demonstrations
- Presentations
- Awards

Dr. Cloud Receives Honor

Professor Gary Cloud, P.E., has been elected to the status of "Honorary Member" in the Society for Experimental Mechanics, a singular honor. The Society's definition of an Honorary Member is: "… an individual of widely recognized eminence in some field in which the Society has interest, and who has also rendered exceptional and sustained service to the Society. An Honorary Member shall be exempt from paying membership dues or fees to attend Society-sponsored events and shall have the same rights and privileges as a Regular Member. Individuals shall be selected for this honor by action of the Executive Board."

University Distinguished Professor Cloud joined the faculty of the MSU College of Engineering 59 years ago, and he continues to conduct research part-time in the MSU Composite Vehicle Research Center, of which he is Founding Director Emeritus. He has served as an engineering consultant to many firms, and he also has been Faculty Advisor of the MSU Formula SAE Racing Team for 25 years.

Dr. Cloud's B.S. and M.S. degrees were obtained at Michigan Technological University, his Ph.D. was bestowed by MSU, and he pursued advanced study in optics at Imperial College, London, U.K. He is a licensed Professional Engineer and Chartered Physicist as well as a Fellow of the Society for Experimental Mechanics and the Institute of Physics.

Dr. Cloud's research interests bring together innovative optical and electronic techniques of experimental mechanics plus analytical mechanics to solve problems in geomechanics, biomechanics, composites, fracture mechanics, fastening, nondestructive evaluation, and structural design. He has written extensively on these topics, including the book Optical Methods of Engineering Measurement and several handbook chapters. He holds 5 patents. Further details may be found at: www.egr.msu.edu/~cloud

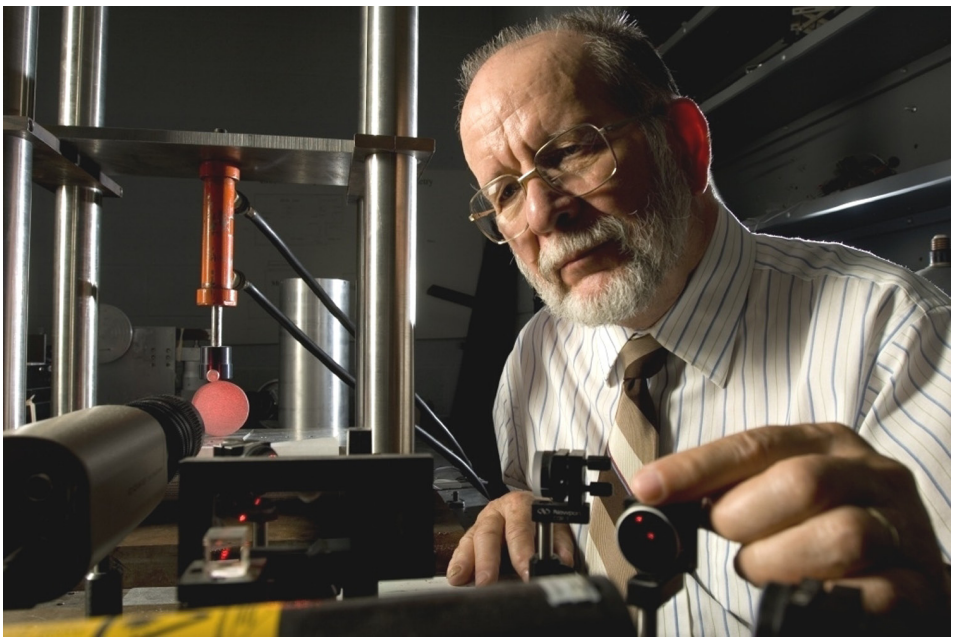

PHOTO PROVIDED BY DR. CLOUD

Dr. Cloud is shown in the MSU Composite Vehicle Research Center where he continues to conduct his research.

Teaching Award Nomination Form:

Curriculum News

Co-op Students: Before you leave for your Spring 2021 co-op rotation, be sure to discuss your schedule for next Fall 2021 / Spring 2022 with your academic advisor.

ME 451-Control Systems & ME 481–ME Design Projects require *department approval* before you can enroll. If you have an accurate long-term schedule on file in the ME Advising Office, request approval by submitting the following forms:

- ME 451- https://me.msu.edu/me-451-enrollment-approval-form
- ME 481- https://www.egr.msu.edu/me/me481-approval-form.

If you do not have an accurate long-term schedule on file, schedule an appointment with Gaile by calling 517-355-3338.

Class Standing. ME juniors and seniors can obtain this information by emailing Gaile at griffore@egr.msu.edu. Be sure to use your MSU email address.

Job Search Advice: The Center is available to answer questions about your job search. To ask a question or schedule an appointment, email the office at: careers@egr.msu.edu

Prerequisites: The ME department expects all students, *including members of the Honors College*, to observe all course prerequisite requirements. If you have a question about prerequisites, contact the ME Advising Office.

Dean's List

Congratulations to these 557 ME majors who made the Dean's List after Spring and Summer 2020. To be on the Dean's List, you must have a semester GPA of 3.5 or better. This list is from September 25 . For updates, go to: http://www.reg.msu.edu/ROInfo/GradHonor/DeansList.aspx

SPRING 2020: David Abatan, Christian Abbate, Ahmed Abboushi, Adi Agaram, Devyansh Agrawal, Matthew Ajlouny, Abdulkareem Alasmari, Ali Albrahim, Jose Alcantar, Khalid Alhammadi, Renad Alhassani, Amarildo Alijaj, Jimmy Almacddissi, Zaid Almodhi, Mustafa Alobaidi, Faisal Alsuhaimi, Ghali Alwajih, Xiaoqiu An, John Andres, Scott Anthony, Matthew Arenz, Garrett Armock, Alexander Arnold, Rachel Arnold, Nick Aseritis, Albert Asta, Alec Bailey, Arjun Balakrishnan, Longfei Bao, Cameron Barghahn, Abel Barraza, Brandon Barrows, Shane Beers, Madison Begin, Paul Beiter, Allison Bell, Anthony Beller, Stefan Bellman, Marcell Benkes-Toth, Matt Bergdolt, Ian Beshears, Zahji Billingslea, Elco Blanco, Jennifer Blowers, Natalie Bobowski, Dan Bojanowski, Adam Bolyard, Jordan Bommarito, Will Book, Jonathan Borgiel, Matt Bradford, Dan Brandolino, Paige Brechtelsbauer, Zac Brei, Joe Bruce, Rourke Brummette, Frederick Bruner, Jacob Bruner, Nathan Buchweitz, Abbey Bugenske, Nicole Burcon, Thomas Burgess, Ian Burress, Taylor Burris, Ellie Burwitz, Brittany Bush, Matthew Bush, Bashhar Byrouthy, Cam Cabana, Anthony Cabrera, Conner Cadieux, Beth Caldwell, Faith Call, Jacob Campion, Oriol Canellassalles, Devin Cao, Yuandalei Cao, Justin Carbary, Emma Carduner, Kevin Carlson, Daniel Carrillo-Solis, Andrew Carter, Brenden Carter, Peter Caruso, Rohan Challa, Brian Chan, Evan Chechack, Claudia Chen, Paul Chen, Yuxin Chen, Adam Childress, Min Choi, Artik Chowdhury, Luke Chrisman, Erin Chynoweth, Josh Ciaccio, William Ciaramitaro, Anna Citko, Emma Clawson, Garrett Colasinski, Sean Colling, Chris Conkling, Paige Cordts, Sean Cornellier, Alex Counseller, Mira Crain, Jacob Cristofori, Torre Crown, Andrew Culver, Emma Curd, Conner Curnutte, Ha Dang, Devon Davenport, Brad Davis, Ross Davis, Rafael De Assis Zanetti Pin, John Delacruz, Nick DeMeester, David Demeo, Haley Denton, Cam Depauli, Marissa Depolo, Antonino Destasi, Aidan Dettweiler, Bryn Dittmar, Brendan Doane, Andrew Dolenga, Matthew Donahue, Eric Douglas, Jaclyn Duff, Jonathon Dufresne, Parker Dukus, Lochlann Dunlavey, Van Duong, Eric Dutkiewicz, Jonathan Elias, Rachel Emerick, Mitchell Encelewski, Nathan Engler, Tommy Erickson, Mark Esper, Mitchell Essenmacher, Zacarias Estrada, Kyle Evans, Michael Faber, Christopher Fadanelli, Stacy Fakhoury, Mike Falter, Ryan Fantin, Brian Fedewa, Alex Feige, Alex Figa, Scott Fingeroth, Kyle Fischer, Mathew Flegel, Andrew Flight, Jake Fosmoen, Adam Fox, Jessica Fox, Alexis French, Ryan Garman, Ben Gaynier, Nick Gerich, Kayla Gibbs, Sean Gielow, Christian Giggy, Kole Gilbert, Mia Gilreath, Veronica Giordano, Jack Girling, Conner Glaz, Noah Goldman, Brandon Gonzalez, Lindsay Goodrich, Spencer Goosen, Anna Graffeo, Jim Graham, Parker Grover, Srujan Gubbi, Dylan Gumbinger, Ryan Gunkelman, Sarthak Gupta, Sohan Gupta, Robert Gustke, Reid Gwyn, Neil Haakenson, Michael Haerens, Andrew Hallam, Humphrey Han, Tianyu Han, Brian Hanton, Bradley Harris, Jack Hasselbring, Karl Havens, Houduo He, Kailey Head, Joe Hegger, Douglas Heine, Ryan Heinze, Rob Hernandez, Zach Hetfield, Vaibhav Himthani, Bryce Hitchcock, Chloe Ho, Trevor Hofman, Luke Honer, Sepehr Hosseinkhani, Brett Howe, Michelle Huang, Shuaiwen Huang, Noah Hubbard, Dylan Huck, Samir Hussain, Rolanda Hutson, Alex Ifkovits, Alexandra Iorga, Taylor Jacobs, Jillian Jakubiec, Andrew Jamison, Rachael Jannette, Christian Jaraczewski, Owen Jarl, Miguel Jarquin-Lopez, Matthew Jasgur, Charley Jiang, Alex Johnson, Griffin Jones, Sloan Kanat, Henry Kantzes, Aaron Kaplan, Melissa Karas, Caleb Karthabortles, Brandon Kearney, Allison Keller, Jacob Keller, Ross Kelly, Ethan Keppy, Devon Killebrew, Lucy Kiloustian, Hyun Kim, Alex Kintner, Deaven Kirn, David Knapp, Natalie Knisley, Ryan Knutson, Jared Koekkoek, Matthew Koenig, Jack Konitsney, Ryan Koschay, Justin Kowalchik, Alex Kraski, Alex Kriese, Sache Krishnaraj, Zak Kubiak, Niranjan Kulkarni, Dave Kumiega, Jacob Kunka, Allison Kwang, Spencer Labuda, Nick LaCross, Olivia Lage, Jenny Lam, Evan Lamb, Joe Lambert, Jack Lambrix, Raj Lamport, Nolan Langer, Ethan Lau, Connor Laubach, Emily Leblanc, Gi Lee, Yeeun Lee, Evan Leslie, Alec Levasseur, Chris Li, Jason Li, Tyler Lim, Richard Lin, Matthew Lipscomb, Dawu Liu, Erica Liu, Erik Liu, Ryan Lokar, Adolfo Lopez, Derek Lopez-Herrera, Dylan Lott, Austin Lowien, Kendall Lusk, Cole Lutkenhoff, Landon Luyckx, Jessica Lypka, Aisyah Mahira, Thanh Mai, Mansoor Makki, Emma Malik, Nuno Marriott, David Marshall, Garrett Martin, Nolan Martin, Lindsay Mau, Peyton Mawong, Scott Maxey, Mark Mccloskey, Chris McGinnis, Maddy McKown, Autumn Mclane-Svoboda, Claire Mcmillen, Douglas Mcnanney, Nicholas Michaels, Connor Michel, Brad Miller, Helen Miller, John Miller, Robert Miller, Hailey Minton, Ravi Mody, Emily Money, Anthony Montemayor, Nehemiah Mork, Parker Morris, Jacob Morrison, Noah Moyer, Najmi Muhammad, Greta Myran, Kearri Myrick, Mario Namou, Jacob Nelson, Joe Nelson, Jake Nevin, Minh Nguyen, Daniel Nicklowitz, Sarah Nold, Garrett Novak, Mitch Nurenberg, Tanner Nurnberger, Tariq Nusier, Stephen Oberheim, Nick Occhiuto, Tim Ohtake, David Olawale, Peter Olszewski, Julia Omara, Aliza Opolka, Marianna Osentoski, Emily Oswald, Jacob Palmer, Cameron Papson, Vanessa Pariso, Mike Pastoria, Khush Patel, Mausam Patel, Kyle Patton, Kyle Pawlowski, Ricardo Pazweber, Luc Pedini, Aaron Pekrul, Angel Perez, Mason Perillo, Anthony Pero, Evan Petersen, Emily Peterson, Julie Pham, Megan Phanrisvong, Jordan Piatek, Rhett Pimentel, Joey Pinakidis, Malcolm Pizzimenti, Samuel Plieth, Austin Pollock, Alexander Pomaville, Kurtis Potier, Jax Prusakiewicz, Sushant Pulipati, Zhiyuan Qu, Thaz Rahman, Liam Ranik, Preston Rashkov, Abhyuday Rastogi, Jessica Ray, Kyle Raymo, Derek Raymond, Carter Reeds, Jack Rees, Ciara Regan-Moore, Sydney Rehr, Isaac Reichow, Dominic Rende, Michael Rettschlag, Joey Rheaume, Frank Rhoades, Austin Rhodes, Matt Rice, Vincent Richard, Alyse Richards, Matthew Rightor, Sam Rinke, Alex Rodriguez, Justin Roelant, Brandon Roux, Ryan Rowe, Mitchell Ruczynski, JuliaRudlaff, Taylor Ruelle, Garrett Ruhala, Justin Rukat, Jacob Rupprecht, Brendan Rybicki, Chris Sadler, Aniketh Salagrama, Eric Salazar, Alyssa Salciccioli, Tariq Salim, Jack Salisbury, Trent Salmon, Anissa Sant, Shalvi Save, Gus Scheier, Natalie Schlesinger, Matt Schram, Kyle Schreur, Audrey Schroeder, Andrew Schultz, Deshawn Schwan, Hannah Scott, Jason Scott, Cameron See, Mitchel Semeyn, Lucas Serraiocco, Jordan Shaulis, Samar Sheikh, Nick Shoner, Matt Simental, Thomas Smither, Jihoon Song, Steven Souphis, Josiah Spaulding, Carson Stachelski, Christian Stack, Jake Stanesa, Justin Stasevich, Ryan Stawara, Arron Stebic, Carter Stefanovski, Connor Steffens, Sheen Steinbarth, Mackenzi Steinmetz, Conner Stevenson, Jayme Stiglich, Matt Stucky, Madeline Stump, Neil Stump, Anthony Su, Brandon Surhigh, Akhilesh Swaminathan, Hailey Swamy, Caden Swindell, Paul Sytsma, Moe Tabateh, Austin Tait, Christian Takla, Jerica Tallman, Pankti Tank, Charlie Tappan, Josh Theis, Nick Thiel, Rylee Thomas, Zachray Tinsley, Emma Todd, Kyle Tomaszewski, Connor Trask, Tyler Triplett, Claire Trygstad, Gus Tsalas, Brandon Tsivitse, Cameron Tsivitse, Tommy Tsuchiya, Sarah Tumavitch, Jacob Turner, Nadine Twal, Brandon Twiehaus, Drew Tyrrell, Kevin Upcott, Saketh Vaka, Daniel Vance, Alaura Vannest, Val Vargas, Bobby Vette, Gregory Vitous, Jack Voigt, Ryan Wade, Jacob Wallace, L ucasWalsh, Katharine Walters, Vanessa Wang, Yen-Cheng Wang, Yiming Wang, Nathan Ward, Aaron Warstler, Ben Washington, Brent Weakland, Chase Weber, Megan Weiss, Nic Weller, Jacob Wells, Logan Wells, Stephen Wernette, Jacob Wescott, Travis Wesley, Jack Whitcomb, Coleson White, Nic Wiggins, Luke Willemsen, Leah Williams, Vance Wilmoth, Gabbie Wink, Connor Witham, Ozan Wood, Joshua Woodford, Kyle Woods, Lena Wuensch, Hannah Wyatt, Shangyu Xie, Zhihao Xu, Griffin Yakey, VolkanYildirim, Marcelo Zapiainpruneda, Gabrielle Zapolnik, Abdelrahman Zebdi, Kyle Zerafa, Ryan Zerona, Haohua Zhang, Jin Zhang, Richmond Zhang, Yu Zheng, Evelyn Zielinski, Valentin Zilkovski, Owen Zimmerman, Kris Zoto, Mark Zummallen.

SUMMER 2020: Michael Faber, Srujan Gubbi, Sarthak Gupta, Brendan Jones, Nathan Kinner, Jacob Klocko, Olivia Lage, Chris Li, Lindsay Mau, Mark Pastoria, Hannah Scott, Abdullah Sribaya, Mckyle Stanfield, Stephen Stormzand, Jacob Turner, Saketh Vaka, Dhiloj Vigneswaran, Logan Wells.

Soft Multi-Arm Robot for Synergistic Collaborations with Humans by Professor Zhaojian Li

The past few years have seen tremendous interest and growth in soft robots with promise of versatile locomotion and dexterous manipulation as demonstrated by biological organisms, like octopuses, starfish, jellyfish, snakes, and caterpillars. These robots have an array of exciting potential applications in search and rescue, elder care, minimally invasive surgery, rehabilitation and performance-augmentation, and handling of delicate objects. In particular, robots equipped with multiple soft arms, termed Soft Multi-Arm RoboT, or SMART, could play a prominent cooperative or assistive role in versatile applications involving interactions with humans. The compliance and thus the intrinsic safety offered by soft robotic arms make them ideal for working with humans.

However, realizing the aforementioned applications for SMARTs poses significant challenges, including simultaneous control of deformation and stiffness tuning, planning and coordination of multiple soft robotic arms, efficient perception system for scene understanding, and human-robot interaction design. MSU ME professor **Zhaojian Li** is teaming up with MSU professors **Xiaobo Tan**, **Vaibhav Srivastava**, and **Changyong Cao**, as well as USDA research leader **Dr. Renfu Lu**. In their funded 4-year NSF National Robotics Initiative (NRI) project, the team will conduct multidisciplinary research to convergently address fundamental challenges in realizing SMART (see Fig. 1 for the project paradigm) and enable their wide adoption in applications involving close collaboration with humans.

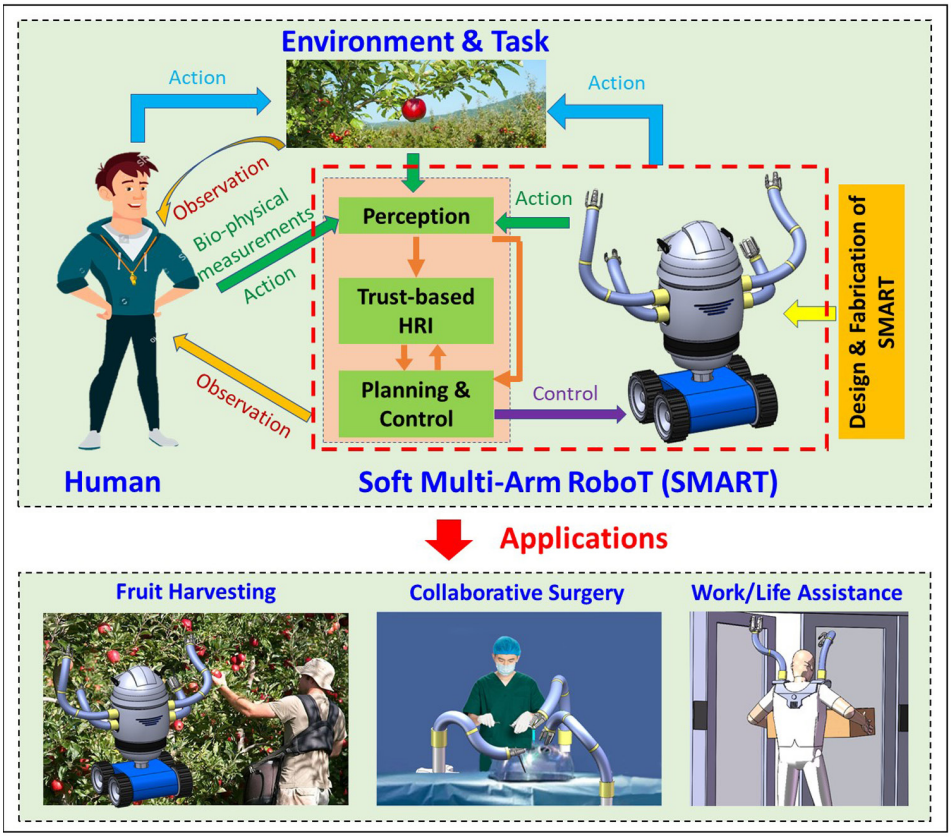

GRAPHIC PROVIDED BY DR. LI

Fig. 1: Paradigm on how a Soft Multi-arm RoboT (SMART) collaborates with a human to accomplish a task, along with some potential applications.

In particular, this project will design cable-driven, stiffness-tunable robotic arms, soft grippers capable of nimble grasping, and integrated sensors for the arms and grippers to realize simultaneous actuation and stiffness tuning and enable dexterous manipulation. For efficient motion planning and control of soft multi-arm robots to enable robust manipulation in 3D space in the presence of stationary and dynamic obstacles, data-driven, control-oriented dynamic modeling of soft robotic arms under loading on a low-dimensional configuration space will be developed using tools such as variational autoencoders and Koopman operators, and sampling-based efficient planning of multiple arms. To foster human-robot collaboration, trust-based human-robot interaction will be developed by explicitly accommodating the dynamics of human trust in the SMART. This project will develop models for human trust dynamics, workload dynamics, and human behavior, and the use of these models for synthesizing the policies for the soft robot based on a partially observed Markov decision process (POMDP) framework.

The developed SMART system will be extensively evaluated in a running case study – collaborative SMART-human apple harvesting. Fruit harvesting is highly labor-intensive and cost-heavy; it is estimated that the labor needed for apple harvesting alone is more than 10 million worker hours per year, attributing to 15% of the total production cost in U.S. Furthermore, manual picking activities constitute great risks of back strain and musculoskeletal pain for fruit pickers due to repetitive hand motions, awkward postures when picking fruits at high locations or deep in the canopy, and ascending and descending on ladders with heavy loads. Therefore, the SMART system, in collaboration with humans, will provide a compelling solution

to tackling labor shortage, lowering human injury risks, and improving productivity and profitability of the fruit industry. Building upon Professor Zhaojian Li's existing research on robotic apple harvesting with rigid robots (see Fig. 2), this project will further enhance orchard perception algorithms and replace rigid robots with soft robots to improve dexterity and reduce bruises.

Overall, the new designs and methodologies from this project will enable safe, efficient, and robust co-operation between multiple soft robot arms and humans. The soft multi-arm robot system can not only improve production efficiency (for example, in assisting fruit harvesting), but also contribute to meeting the nation's urgent need to take care of the elderly population (for example, in elder care and assisted living).

PHOTO PROVIDED BY DR. LI

Fig. 2: Robotic apple harvesting platform developed at Prof. Zhaojian Li's lab.

Let's Focus on Liking ZOOM by Craig Gunn, Director of Communications

In this time of ZOOM, we should be looking at the positive aspects of the use of this form of communication instead of spending an inordinate amount of time complaining about our perceptions of how much we hate ZOOM. Let's rather consider that ZOOM could provide us with a great deal of important information about our continuous need to communicate.

So where do we start? How about the simple issue of what we are wearing during the Zoom. Pajamas, underwear, or last week's sweatshirt? It's casual so who cares? Well, this is still a professional operation and we should consider what it is that we are trying to convey – our professionalism! Dress up. Don't dress down. Our audience doesn't really want to see us in an old t-shirt. They take confidence in our appearance.

Secondly, how about a well-rehearsed presentation that considers the time we are given and how we utilize that time. If you have 50 minutes to present, don't take 63 minutes. Too much material means that you rush your presentation and that doesn't present well with your audience. If you prepare your presentation and have it critiqued by a number of your peers, then you have a greater chance of really coming across as the expert, which you should be since it is your information.

Thirdly, since ZOOM may be with us for a long time and future employers, colleagues, and agencies providing grants may find ZOOM to be a great way to communicate, perhaps it is best that we all make the best use of it and make it work for us. Practice what you have to say, look carefully at how you look on screen, and get a confidence to be ready at a moment's notice to perform ZOOM wise. ZOOM is not going away. Use it to your best advantage!!

About Cryogenic Engineering by Professor Peter Knudsen

Cryogenic engineering involves the mechanical and thermal-fluids design of systems that operate at temperatures from liquefied natural gas down to helium (from -260 to -452 degrees Fahrenheit).

These systems are necessary nationally and internationally for the aerospace, industrial gas, and power industries, and for government and private organizations performing sub-atomic particle and low-temperature research. To design such systems, it is necessary to understand non-ideal fluid and material properties. In addition, thermal-mechanical optimization and integration is inherent in their design.

MSU's College of Engineering and its Mechanical Engineering Department, in collaboration with the Facility for Rare Isotope Beams (FRIB) at MSU, offer three cryogenic engineering courses to introduce students to various aspects of the field. Available courses:

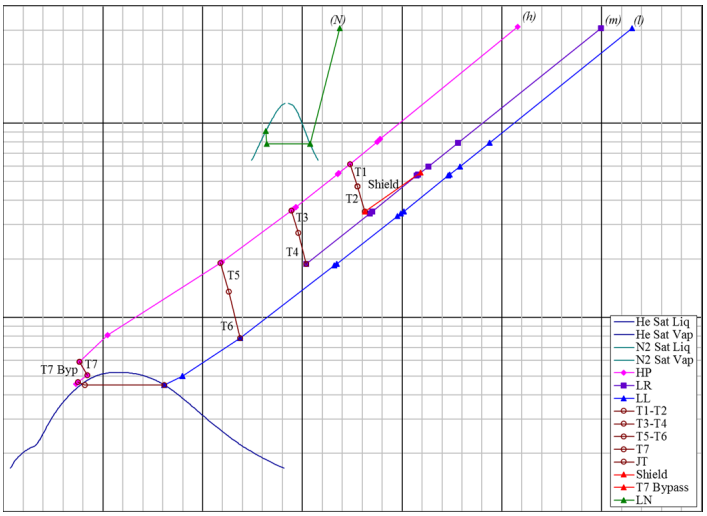

PHOTO PROVIDED BY DR. KNUDSEN

Temperature-entropy diagram for FRIB's Central Helium Liquefier (CHL)

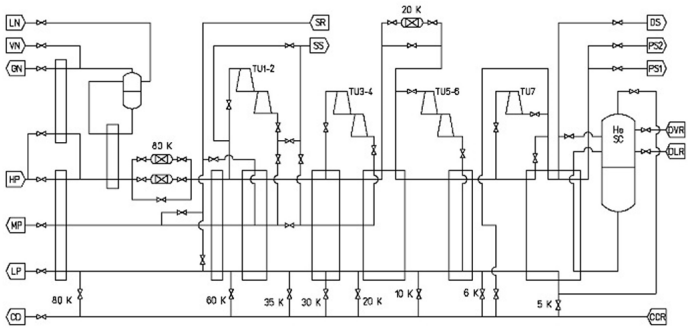

PHOTO PROVIDED BY DR. KNUDSEN

Simplified schematic of FRIB's Central Helium Liquefier (CHL)

ME 414-Mechanical Design of Cryogenic Systems is offered during fall semesters. It focuses on:

- Mechanical design of cryogenic piping systems
- Analysis of stresses due to process conditions such as pressure, temperature, and momentum
- Optimization and trade-off of the thermal and mechanical design
- Incorporation of non-constant material properties
- ASME design codes (to give students an understanding of what is required in the industry)

ME 413-Cryogenic Thermal Systems is offered during spring semesters. It focuses on:

- Thermodynamics of cryogenic process cycles
- Ideal cycles and real cycles
- The concept of exergy (or availability)
- Modeling of components
- Cryogenic distillation (how gas mixtures with boiling points substantially below the environment are separated)
- Vacuum systems (integral to the thermal insulation)
- Instrumentation

Every other fall, the graduate class, ME 940-Cryogenic Process Engineering, is offered. This class continues where the previous two classes left off, focusing in greater detail on the thermal-fluid process design and analysis aspects of cryogenic systems. The next course is planned for Fall 2022.

The MSU Cryogenic Initiative (frib.msu.edu/cryoinitiative) is a collaboration between FRIB and MSU's College of Engineering. It offers opportunities for graduate students interested in applied research in cryogenic engineering. Contact **Dr. Venkatarao Ganni** (ganni@frib.msu.edu), **Dr. Pete Knudsen** (knudsen@frib.msu.edu), or **Dr. Nusair Hasan** (hasann@frib.msu.edu) for more information.

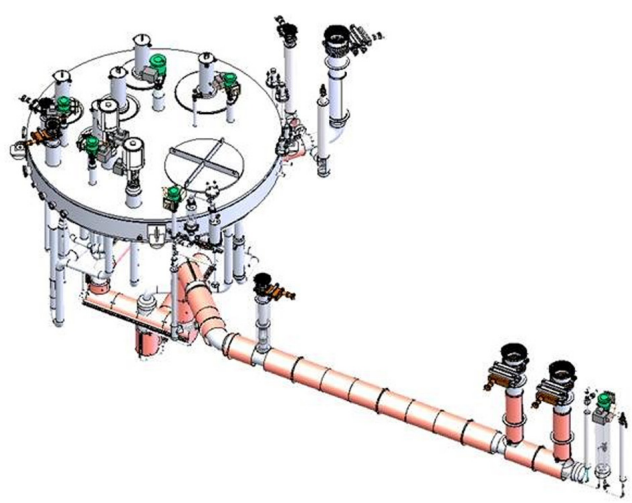

PHOTO PROVIDED BY DR. KNUDSEN

FRIB's Sub-atmospheric Cold Box (SCB) which houses five cryogenic centrifugal compressors necessary to achieve 2 Kelvin.

Deadline: Nov 13

Cryogenic Concentration Requirements

A mechanical engineering degree with the cryogenic engineering concentration signifies the interests and expertise of students in thermal and mechanical analysis and design techniques as applied to cryogenic engineering applications.

To complete a Bachelor of Science degree in mechanical engineering with an engineering mechanics concentration, students must complete the requirements for the B.S. degree, including the following 12 credits:

•ME 413 Cryogenic-Thermal Systems 3 credits (Spring Only)

•ME 414* Mechanical Design of Cryogenic Systems 3 credits (Fall Only)

•ME 416* Computer Aided Design of Thermal Systems 3 credits (Fall Only)

•ME 442* Turbomachinery 3 credits (Spring Only)

CREDIT DISTRIBUTION:

The 12 credits in the concentration will fulfill the Senior Elective requirement, including the "design intensive" course component.

Completion of the option will be noted on the final transcript. The asterisk (*) signifies that the course is design intensive.

99 Seniors to Graduate in December!

Congratulations to all mechanical engineering December graduates! On behalf of the ME faculty, I wish you the greatest happiness and success in your careers, graduate studies, and personal lives. The following students had applied for graduation by October 16. If your name is missing, please contact me immediately (Email Gaile at <griffore@egr.msu.edu> Tele: 517-355-3338).

Ahmed Abdulla Alhosani
Evan Joseph Alvanas
Matthew Allen Archambo
Joseph Daniel Auty
Artea Azizi
Ryan William Babiarz
William Gregory Book
Jonathan James Borgiel
Michael Anthony Brannon
Nathan Foster Buchweitz
Kevin Mark Carlson
Alena Isabella Chapdelaine
Evan Robert Chechack
Paul Chen
Yuxin Chen
Jeremy Andrew Coleman
Mathias Pierre-Yves Cornet
Matthew Gregory Covert
Bradley D Davis
Tyler John Davis
David Carl Demeo
Antonino Salvatore Destasi
Andrew David Dolenga
Noah Evan Dudley
Parker Allan Dukus
Kyle Franklin Evans
Michael John Faber
Dominick Anthony Ferro
Mathew Robert Flegel
Alexis Renee French
Brett Thomas Hahne
Andrew Byron Thomas Hallam
David Kenneth Harris
Paige Alexandra Hartman
Max Paul Herzog
Zachary Douglas Hoffman
Trevor Alan Hofman
Rhylan Andrew Huss
Jillian M Jakubiec
Brendan Steven Jones
Jacob Emerson Jyawook
Caleb Michael Karthabortles
Scott Michael Kelley
Matthew Tyler Koenig
Tyler Nishii Koizumi
Patrick Michael Korte
Cameron Donald Lewis
Boyuan Li
Collin Paul Lynch
Emma Sophia Malik
David Gregory Marshall
Lindsay Erica Mau
Mehta, Ajay
Ethan G Mekjian
Benjamin R Merrill
Josh Dean Meyer
Helen Airi Lehto Miller
Robert Herbert Miller
Nicolas Anthony Moscone
Zachary Albert Myers
Jacob Anthony Nevin
Alexander Paul Overholser
Cameron Liam Papson
Joshua Richard Peckens
Aaron Kelly Pekrul
Megan Ann Phanrisvong
Joseph John Pinakidis
Alexander Martin Pritchard
Connor Nigel Quigg
Alison Nicole Reinhold
Michael Garret Rettschlag
Matthew Levi Rightor
Justin Paul Roelant
Owen Benjamen Ruster
Randall Gary Sawyer
Jack Thomas Schlegel
Natalie Rae Schlesinger
Audrey Lee Schroeder
Andrew Paul Schultz
Andrew Patrick Scott
Dillon James Shimel
Steven Alexander Smith
Austin Matthew Smith
Ryan Kendell Stawara
Neil Thomas Stump
Abigail Louise Swasey
Christian C'edomir Tasich
Sarah Michelle Tumavitch
Brandon Thomas Twiehaus
Arya Chakraborty
Gregory James Vitous
Dennis Michael Volostnykh
Alex Tian Vu
Victor Yiyang Wang
Yen-Cheng Wang
Chase Thomas Weber
Che-Kuan Chris Yu
Xuyuan Zhao
Kris Zoto

Teaching Award Nomination Form:

SAE International

Formula SAE

For the last thirty years, Michigan State Formula Racing has proudly represented the Spartan community in Formula SAE, the world's largest collegiate design series. Every year, teams are challenged to build a small, open wheel race car from the ground up.

Recently, the team's work has looked a little different. Despite last year's car, SR-20, running and driving in early March, it became evident that the competition landscape would look very different for the 2020-2021 season. The beginning of last year's testing schedule had both started and ended within a week, and suddenly the team was without access to the machine shop. Instead of wallowing in defeat and giving up on attending a competition, optimistic team leaders immediately began brainstorming how they can make State Racing vehicles better for the next opportunity to show the world what Spartan engineers can do.

Leaders took the cards that they were dealt and came up with a new plan: one where they can perfect the team's current platform, while also developing a brand-new one for the future. By utilizing a completely redesigned carbon fiber monocoque and steel spaceframe chassis, the team will be able to integrate an electrified powertrain while using the base internal-combustion platform. Extra design time afforded by the pandemic has allowed team leadership to extend deadlines, which allows leaders to spend more time on tasks that may have been overlooked during a typical design cycle. The team is excited to show the world what we can do, and to succeed despite limitations imposed by COVID-19! Go green, go white, and most importantly, go fast!

Keep up with our progress: @msuformularacing on Instagram and Facebook *Submitted by Noah Goldman, Colling Project Lead*

PHOTO PROVIDED BY DAVE YONKERS

Here is the last image to be taken of the SR-20, the vehicle that was scheduled to compete last year. Hopefully, it will be competing next summer.

Undergraduate Program Educational Objectives
Department of Mechanical Engineering
Michigan State University

(Approved by the ME Department Faculty on December 10, 2015)

Our graduates will:

- *Be competent and ethical engineers practicing in a diverse range of activities.*
- *Use their mechanical engineering education as a stimulus for personal and professional growth.*
- *Be recognized for their capability, creativity, and application of knowledge.*
- *Be independent and critical thinkers who identify problems and develop effective solutions.*

"Remember when we thought the pandemic was only going to last a couple of weeks?"

Victor Varnado / The New Yorker Collection/The Cartoon Bank

SPRING SEMESTER SENIOR ELECTIVES

▶**The asterisk (✻) after a course number indicates that it has been officially designated as "Design Intensive."** ***The instructor information is subject to change.***

ME 413 Cryogenic-Thermal Systems. 3(3-0). Prereq: (ME 410 or concurrently). *Hasan/Knudsen.*
ME 417✻ Design of Alternative Energy Systems. 3(3-0). Prereq: (ME 410 or concurrently).*Yuan.*
ME 426 Introduction to Composite Materials. 3(3-0). Prereq: (ME 222). *Xiao.*
ME 433 Introduction to Computational Fluid Dynamics. 3(3-0). Prereq: ME 410 or concurrently. *Gao.*
ME 441 Aerodynamics and Aircraft Performance. 3(3-0). Prereq: (ME 332). *Allison.*
ME 442✻ Turbomachinery. 3(3-0). Prereq: (ME 332). *Mueller.*
ME 445✻ Automotive Powertrain Design. 3(3-0). Prereq: ME 444. *Schock.*
ME 456✻ Mechatronic System Design. 3(2-3). Prereq: (ECE 345 or concurrently) and (ME 391 or concurrently). *Zhu.*
ME 464 Intermediate Dynamics. 3(3-0). Prereq: (ME 361). *Recktenwald.*
ME 465✻ Computer Aided Optimal Design. 3(3-0). Prereq: (ME 222 and ME 280) and (ME 370 or concurrently). ***Online Course.*** *Averill.*
ME 477 Manufacturing Processes. 3(3-0). Prereq: (ME 222) and (MSE 250). *Guo.*
ME 478✻ Product Development. 3(3-0). Prereq: (ME 477). *Kwon.*
ME 490 Independent Study. 1-4 credits. *See Override Instruction #2 below*. You may reenroll for a maximum of 6 credits.
ME 491✻ Selected Topics in Mechanical Engineering. Section 001 (***1 credit***): Integrated Systems Design. *See Override Instruction #1 below*. Students should consider taking this course for three semesters to receive a total of 3 credits and fulfill the design intensive senior elective requirement. This is a project based course and students should be available outside of class for team meetings, project work, and design reviews. Prereq: None. *Recktenwald/Resh*.
ME 495 Tissue Mechanics. 3(3-0). Prereq: (ME 222). ***Biomedical Concentration Course***. *Grimm.*
BE 444 Biosensors for Medical Diagnostics. 3(3-0). Prereqs: (BS 161) and (CEM 141) and (ECE 345). ***Biomedical Concentration Course.*** *Alocilja.*
CE 407 Materials Engineering: Properties, Selection and Processing. Prereq: (CE 221) and (ME 222). Recommended Background: MSE 250. *Lu*.
CHE 483 Brewing and Distilled Beverage Technology. *See Override Instruction #3 below*. See the Schedule of Courses for location information. Prereq: (Age 21 or higher) and (Senior standing) and (ME 410-Heat Transfer or concurrently). *TBA.*
ENE 422 Applied Hydraulics. 3(2-2). Prereq: ME 332. *Pokrhel*.
MSE 465 Design & Application of Engineering Materials. 3(3-0). Prereq: MSE 250. *Eisenlohr.*
Graduate Level Courses: Honors College members and/or students with 3.5+ GPAs might consider taking a graduate course as a senior elective. Before enrolling, several signatures, including that of the instructor, are required. Possible choices for Spring 2021 include ME 814, 825, 861, and 872. *See Override Instruction #4 below*.

SENIOR ELECTIVE OVERRIDE INSTRUCTIONS

1) General Override Request Procedure: Complete and submit the ME Override Request Form: https://www.egr.msu.edu/me/me-override-request Please note that the ME department cannot overfill required courses to resolve conflicts with Senior Electives, Other Electives, Integrative Studies courses and employment schedules.

2) ME 490–Independent Study Enrollment Procedure: Find a professor who is willing to supervise your independent study, and discuss your plans with him/her. Complete an *ME 490/490H Enrollment Contract* (independent study form), available in the ME Advising Office in 2560 EB. After you and your professor have completed and signed both sides, return the form to the ME Advising Office for the remaining signatures, override, and enrollment.

3) CHE 483–**This course has a maximum enrollment of 100. When it is full, no additional overrides will be given**. You can still set an alert via Schedule Builder, but it would be a good idea to enroll in a back-up course.

4) Complete the *Graduate Course Override* form, which can be obtained from Gaile (griffore@egr.msu.edu). This is a PDF form that must be printed, signed, and sent back to Gaile.

Department of Mechanical Engineering

MICHIGAN STATE UNIVERSITY

ME Advising Office
Dept of Mechanical Engineering
Engineering Building
428 S. Shaw Lane, Rm 2560
East Lansing MI 48824-1226

Fall Semester Calendar

November 13	All currently enrolled students who have not enrolled by 8 p.m. in at least one course for Spring will pay a $50 late fee.
November 13	**Deadline for Withrow Teaching Award Nominations.** The nomination form is on the ME website (https://www.egr.msu.edu/me/). [Click on Undergraduate, and then Forms and Policies.]
Nov 26-27	Thanksgiving recess
December 11	**Last day of classes & Design Day.**
December 19	**Virtual** Undergrad Commencement Ceremony-10 a.m.
Dec 14-18	Final Exams
Dec 15-Jan 10	Semester Break
January 15	On-line Open Add Period for Spring 2021 ends at 8 p.m. **Also**, this is the deadline for May 2021 and August 2021 graduates to apply for graduation and have their names printed in the commencement program.
March 15	Scheduled Computer/Telephone Enrollment period for summer semester begins.
April 2	Computer Enrollment period for fall/spring 2021-2022 begins. Your enrollment access date will be posted on StuInfo in mid-March.