ME Bulletin

News for Mechanical Engineering Majors

Vol. 57, No. 1 ME Advising Office • 2560 EB • 355-3338 Fall, 2019

COVER STORY:

ASME E-Fest 2020!

Turn to page 3

PHOTO PROVIDED BY LIZ POLLACK

The 2019 MSU Human Powered Vehicle Challenge team celebrating the conclusion of the endurance event. The 2.5 hour event was held on an obstacle track in the parking lot of Spartan Stadium during the 2019 E-Fest. The team scored 13th out of 50 teams in the endurance event and 21st overall. Left to right: Liz Pollack, Dr. Geoff Recktenwald, Fanghan Lu, Danielle Keusch, Emily Oswald, Joey Pinakidis, Rolanda Hutson, Michael Houser, Noah Rimatski, Alaura VanNest, and Dr. Bill Resh.

Teaching Award Nomination Form:

How to Bench Press 400 Pounds by Professor Ron Averill, ME Associate Chair

PHOTO PROVIDED BY DR. AVERILL

Just the other day I saw someone bench press 400 pounds. The lifter had three spotters, one at each end of the bar and one overhead in case help was needed. During the lift, each of these spotters had to strain much more than expected to keep the weight from falling on the lifter. They estimated that each spotter contributed about 80 pounds of vertical force as the weight rose from the lifter's chest to the fully extended position. After completing the feat, the lifter jumped up from the bench and celebrated like he had just won the super bowl.

But did he really bench press 400 pounds? Of course not. Simple math estimates that he lifted about 160 pounds, while his friends did most of the work.

Could this person really lift 400 pounds? Nope. Not even close, based on this attempt.

Would the lifter eventually get stronger if he performs this feat regularly? Not much. It is more likely that the spotters will get stronger. Getting stronger requires consistent struggle, and depending too much on spotters reduces the need and the motivation to struggle.

This reminds me of the way many engineering students study and practice problem solving. The problem statement is in one hand, the sheet with the student's work-in-progress is in the other hand, and the complete solution from CHEGG or some other source is on the computer screen. When there is even the slightest doubt about how to complete the next step, the worked out solution on the screen is referred to for support. The worked out solution is like a spotter, doing most of the work for the student.

Will this approach lead to increased knowledge and problem solving skill? Not much. You see, the brain also needs to struggle for you to get smarter. Your brain adapts to the stress by creating new and more complex connections, and by strengthening memory pathways.

Existing solutions to problems can serve a positive function in the beginning of the learning process, when you are learning the solution steps or how to apply certain concepts for the first time. But you only need a few of these, not hundreds of them.

Then, it's time to take off the training wheels and try to solve problems on your own. You might still need to glance at a solution now and then when you get truly stuck, but doing this too much will prevent you from building the ability and the confidence to solve problems yourself.

It will be hard at first, and you will certainly feel uncomfortable. That's to be expected anytime you step outside your comfort zone. And that's exactly where you

Cont'd on pg 3

ME Bulletin

The *ME Bulletin* is published twice a year (fall & spring) for sophomores, juniors, seniors, faculty, and staff of the Department of Mechanical Engineering. Photographs were taken by Craig Gunn unless noted otherwise.

Send all correspondence to:

Gaile Griffore, Newsletter Editor
Dept. of Mechanical Engineering
Michigan State University
2560 Engineering Building
East Lansing, MI 48824-1226
Telephone: 517-355-3338
griffore@egr.msu.edu

In This Issue

COVER STORY: ASME E-Fest 2020!

by Brendan Jones, ME Junior, and Professor Geoff Recktenwald

GRAPHIC PROVIDED BY DR. RECKTENWALD

For the second year in a row, MSU will be hosting E-Fest North. The E-Fests (or Engineering Festivals) are a global engineering event organized annually by the American Society of Mechanical Engineers. ASME produces four festivals: two in the United States, one in India and one in South America. Among the festival events are the Student Design Competition, the Innovative Additive Manufacturing 3D Competition, the Human Powered Vehicle Challenge, the Old Guard Oral Competition, and the new Elevator Pitch Competition, as well as workshops that promote professional and personal development and much more. E-Fest North will be held at MSU from April 3rd-5th 2020. Last year the event attracted over 800 participants and was made possible by an amazing crew of volunteers.

Competitions

The competitions at E-Fest pull from varying fields within engineering, ranging from robotics to vehicle design. There are four design competitions and two oral competitions for the Spring 2020 festival. The Human Powered Vehicle Challenge (HPVC) is one of the most popular events in which student teams from all over the world design efficient zero-emission commuter vehicles and use them to compete in a series of different challenges. The Student Design Competition (SDC) ranges from year to year with the 2020 edition challenging teams to build machines capable of constructing miniature towers. The Innovative Additive Manufacturing 3D Challenge (IAM3D) for this year involves creating unmanned aerial racing cargo vehicles to transport payloads throughout a predetermined course. The two oral competitions emphasize public speaking skills from persuasion to delivering an elevator pitch. For more information on these competitions, visit efests.asme.org/competitions

Getting involved:

Volunteer! The ASME chapter at MSU works hard with National ASME to make this event happen, but we are always looking for help! With an event of this size, many volunteers are needed at all times to make sure the event runs smoothly. ASME offers free admission to the general event for those willing and able to volunteer for it.

Compete! Last year, Michigan State created its first HPVC team to compete at E-Fest competitions. If you would like to join the team for the 2020 HPVC competition, contact **Alaura VanNest** at vannesta@msu.edu for more details.

We also strongly encourage anyone interested in creating their own team for another competition to please do so. We do not have any teams for Student Design Competition or Innovative Additive Manufacturing 3D Challenge! The MSU chapter of ASME will have 50 discount codes to give out to students interested in being more involved in the events. Contact **Brendan Jones** at jonesb76@msu.edu if you have any questions regarding the event or any competitions.

For more information, visit efests.asme.org

❖❖❖❖❖

Cont'd from pg 2

are unless you are already an expert on the topic you are studying. So that uneasy feeling in your gut means you are probably making progress.

You must embrace the temporary discomfort of the learning process to experience the lasting feelings of confidence and accomplishment that come from developing real knowledge that will make you a better engineer. You'll get there much faster with less dependence on someone else's solutions, and more struggle to obtain them yourself.

Academic Advising

1) **ME Juniors and Seniors** are advised by **Gaile Griffore**. For an appointment, call 517-355-3338, or go to 2560 EB.

2) **Sophomore juniors-to-be with a 3.1 GPA** are advised by **Gaile Griffore**. For an appointment, call 355-3338, or go to 2560 EB.

3) **Sophomores** who do not fit the criteria in number 2 above are advised by **Jeffrey Tsang**. Schedule an appointment with him at:
https://login.msu.edu/?App=Shibb-SSC-GradesFirst

4) **ME Freshmen** are advised by **Jeffrey Tsang**. Schedule an appointment with him at:
https://login.msu.edu/?App=Shibb-SSC-GradesFirst

Teaching Award Nomination Form:

ME Juniors & Seniors Select Dr. Feeny for the 2019 Withrow Award!

Professor Brian Feeny received the 2019 Withrow Teaching Excellence Award last spring at a special awards luncheon and ceremony. He was presented with an inscribed plaque, a medallion, and a small stipend. Each year a committee consisting of student representatives from ASME and Pi Tau Sigma reviews nominations from ME juniors and seniors and makes the selection.

PATRICIA MROCZEK

Dr. Leo Kempel, Dean of the College of Engineering, Dr. Brian Feeny, and Dr. James Klausner, ME Chairperson.

Dr. Brian Feeny is known for his approachable style and ability to clearly convey course material. Students feel comfortable coming to him with questions, and in turn receiving thoughtful answers as he shares the knowledge he has attained in his more than 27-year career at MSU. Many of his students sing his praises. He is described as "an individual who is able to detail course material so it is understandable." "His enthusiasm is always evident because he cares about his students." "His awesome sense of humor, which makes all of his classes interesting, is the catalyst to provide a learning environment that allows all to learn."

Dr. Feeny's teaching was previously honored with the Withrow Teaching Excellence Award in 1995, and his research scholarship was recognized with an NSF CAREER Award in 1996. He currently teaches a broad range of classes in vibrations, control systems, and dynamics at both the graduate and undergraduate levels. He has advised 15 doctoral students and mentored 22 master's students.

Students have noted his tireless dedication to ensuring their success. "This guy does really care about his students and is willing to help students even outside of the office hours." "He is a genuine human being who spends an enormous amount of time giving of himself to promote learning." As one student noted, "He works too hard not to receive this award!"

Dr. Feeny's research interests are in dynamics and vibration, with current activities in nonlinear dynamics, chaos, modal decomposition, traveling waves, friction dynamics, and system identification. Some current applications include wind turbine blade dynamics, vibration absorbers, and bio-locomotion.

His outside interests include ice hockey, swimming, cross-country skiing, running, camping and hiking.

The Department of Mechanical Engineering congratulates Dr. Feeny for his dedication to students, and is proud to recognize him with his second Withrow Teaching Excellence Award.

Department News

PHOTO PROVIDED BY DR. BUSH

• **Laurel Kuxhaus** has been named Program Director of the Biomechanics & Mechanobiology Program within the Division of Civil, Mechanical and Manufacturing Innovation, Directorate for Engineering at the National Science Foundation (NSF). Kuxhaus is an alumna of Michigan State University, including the Honors College. She received her bachelor's degrees in engineering mechanics and music in 2001, where she got her start in biomechanics research. She also has a master's degree in mechanical engineering from Cornell University, and a Ph.D. in bioengineering from the University of Pittsburgh. She recently served as a 2018-19 ASME Congressional Fellow working in science policy in the US House of Representatives. Currently, she is an associate professor of mechanical and aeronautical engineering at Clarkson University and a Fellow of the American Society of Mechanical Engineers.

• **Ms. Jessica Pung** has joined the ME department as our new undergraduate secretary. Jessica comes to us from St. Mary School and St. Peter School where she was an elementary teacher for five years. Jessica previously worked as an undergraduate student for the ME department as well. In her spare time, Jessica enjoys reading, TV and movie trivia, and camping.

Deadline: Nov 15

83 Seniors to Graduate in December!

Congratulations to all mechanical engineering December graduates! On behalf of the ME faculty, I wish you the greatest happiness and success in your careers, graduate studies, and personal lives. The following students had applied for graduation by October 10. If your name is missing, please contact me immediately (Email Gaile at <griffore@egr.msu.edu> Tele: 517-355-3338).

Ali Akber Abedi
Ahmed Mohammed Shaker Alblooshi
Faris Abdulmajeed Y Alghool
Mohammed Khaled Saeed Alneyadi
Andrew Edmund Aziz
William Cameron Barrett
Matthew Trent Belknap
Francesco Joseph Biondo
Zachary Matthias Borgerson
Leah Kathryn Brickner
August Dean Butzke
Samuel Theodore Case
Haoran Chen
Mitchell Ross Cline
Zachery M Daniels
Craig Michael Declerck
Brent Patrick Diamond
Carson Patrick Eby
Katherine Ilinka Filipovic
Patrick Ronald Floyd
Mark Gjeloshaj
Levi Wright Graves
Demarcus Javon Gregory
Joseph Ian Gusumano
William Sungwon Hahm
Olivia Julia Hargrave-Thomas
Isabella Pauline Henry
Nicholas Michael Houghton
Reed Andrew Hylka
Chelsey Marie Jenkins
Nathaniel Adam Jenkins
Peiran Jiang
John Christian Kalil
Muhammad Fadzlan Bin Kamarudzaman
Edward M Kelly
Andrew David Kistler
Zachary Robert Kraut
Anthony Elston Lafata
Lauren Elizabeth Lage
Sang Seung Lee
Nathaniel Lewis
Thomas James Lindsey
Simon Liu
Maria Daniela Martin Pereira
Jeffrey Evan Masten-Davies
Alexander Edmund Matkowski
Michael Frank Mazza
Molly Marie McClorey
Daniel R Mcgrail
Mackenzie Marlene Meyers
Sophia Ann Miller
Morrice Cornelius Morris
Jordan Andrew Odehnal
Ryan Michael O'Quinn
Ana Alicia Otero
Justin Anthony Piccolo
Sean Allan Powers
Ryan Nadeem Qamar
Spencer James Rinke
Brett Anthony Roginski
Danielle Lynn Rosebrook
Tomo Max Saito
Matthew Isaac Sarver
Oscar Joseph Scheier
Ryan Lawrence Simon
Alexander Foster Stangeland
Eric Michael Stauffer
Nicholas Aaron Stein
Blake Edward Swift
Jonathan Oliver Theoret
Lars Christian Thornton
Nicholas Steven Van Oost
Zachary John Wagner
Demetria Christina Webster
Garrett Spencer Weidig
Chase Michael Wilterdink
Chad M Winner
Dong Yang
Trevor Alexander Zak
Connor J Zehr
Hang Zhao
Chizun Zou
Yifan Zou

Tutoring

•The ME Learning Center in 1237 EB, has free mentors for ME 201, 222, and 361 at 6-10 p.m. on Sunday through Thursday.

•The Guided Learning Center (GLC) in 1108 EB, offers free drop in tutoring in math up to differential equations, science courses (chemistry, physics, etc.), and many core engineering courses. To request assistance, go to: https://www.egr.msu.edu/dpo/academics/guided-learning-center [Scroll down and click on application form]

•The Cornerstone & Residential Experience (CoRe) program offers free tutoring in G24B Wonders Hall on Sunday through Thursday from 6 - 10 pm. This "drop-in" setting provides help for MTH 132, 133; 234, and 235, CEM 141, and PHY 183 and 184.

•ME graduate student tutors can be contacted through the ME Advising Office. These tutors charge a fee, which you can negotiate with them. If you are interested, email **Gaile Griffore** at griffore@egr.msu.edu

MICHIGAN STATE UNIVERSITY Design Day COLLEGE OF ENGINEERING

Friday, December 6, 2019
Engineering Bldg

Come and see our students lead, create, and innovate

- Competitions
- Demonstrations
- Presentations
- Awards

Teaching Award Nomination Form:

Curriculum News

Co-op Students: Before you leave for your Spring 2020 co-op rotation, be sure to discuss your schedule for next Fall 2020 / Spring 2021 with your academic advisor.

ME 451-Control Systems & ME 481–ME Design Projects require *department approval* before you can enroll. If you have an accurate long-term schedule on file in the ME Advising Office, request approval by submitting the following forms:

•ME 451-
https://me.msu.edu/me-451-enrollment-approval-form

•ME 481-
https://www.egr.msu.edu/me/me481-approval-form.

If you do not have an accurate long-term schedule on file, schedule an appointment with Gaile by calling 517-355-3338 or stopping by 2560 EB.

Class Standing. ME juniors and seniors can obtain this information in 2560 EB. Be prepared to show your MSU I.D.

Job Search Advice: The Center is available to answer questions about your job search. To ask a question or schedule an appointment, go to C108 Wilson or call 517-355-5163. Or, email the office at: careers@egr.msu.edu

Prerequisites: The ME department expects all students, *including members of the Honors College*, to observe all course prerequisite requirements. If you have a question about prerequisites, contact the ME Advising Office.

ME 413-Cryogenic-Thermal Systems by Dr. Peter Knudsen

Cryogenic engineering applications are found in aerospace, industrial gas and energy processes, and particle physics experimental facilities. This includes space vehicle propulsion systems, launch vehicle ground systems, space simulation facilities, air separation plants, LNG systems, hydrogen liquefiers, and helium cryogenic systems for particle accelerators.

In conjunction with the MSU-FRIB Cryogenic Initiative, the Mechanical Engineering Department is offering again ME 413-Cryogenic Thermal Systems (3 cr). Prerequisite: ME 410 Heat Transfer or concurrently.

This course is an introduction to the thermal and fluid aspects of cryogenic systems. Including low temperature properties of materials and fluids, an introduction to cryogenic liquefaction and refrigeration cycles, separation and purification systems, instrument systems for low temperature measurement, fluid storage and distribution, and vacuum technology. This course complements the one presently being taught this fall, ME 414-Mechanical Design of Cryogenic Systems (3 cr). Pre-requisite: ME 370 Mechanical Design. The two courses provide a well-rounded introduction to the thermal-fluids and mechanical aspects of cryogenic engineering.

ME 491 - Integrated System Design: The Electric Commuter Bike Project by Drs. Recktenwald & Resh

We are excited to announce a new innovative senior design elective on integrated systems design, ME491/001: Selected Topics – Integrated System Design.

This 1 credit course is a hands-on design project experience to help you develop skills necessary to being a successful engineer. Students will be participating in open-ended problem solving, teamwork, student led design decisions, fabrication, and product testing. Practical lectures will focus on design specific skills and include guest speakers to provide expertise on project specific topics.

Our current project is the construction of a prototype electric commuter bicycle. This is a continuation of the honors option electric bicycle project.

How can a 1 credit course be useful? This course may be taken 3 semesters (consecutive or non-consecutive) to accumulate 3 credits of design intensive senior elective. In subsequent semesters, students will be able to run tests on the bicycle and improve the design. Students may enroll in this course as soon as they have attained junior status based on credit hours.

For more information, please contact **Dr. Resh** (reshwill@egr.msu.edu) or **Dr. Recktenwald** (gdr@egr.msu.edu).

Deadline: Nov 15

A Few Thoughts on Plagiarism by Craig Gunn, Director of Communications

One of the things that we as human beings have a problem with is our inability to know when to stop stealing. We see a dollar on the street and we make no attempt to find the owner. We munch on a candy bar while we shop but fail to pay for it when we leave the store. We move into our new apartment and find that the cable is still working strong and we haven't been billed so we just let it go and usually remark, "That's the cable company's fault, not mine!" We have a tendency to justify almost everything that is on the wrong side of the law. "There was no policeman present, so I really didn't break the law when I ran through the red light!" "When I drove away in someone else's car it was their fault because they left it unlocked with the keys in it!" The excuses for bad behavior keep building in the minds of those who have no idea where these excuses will lead.

So, too is it with PLAGIARISM. We make up a wide range of excuses for using material that belongs to someone else without crediting them for what they wrote. We claim that it is necessary because we don't have the time to find the original material. We claim that it is the instructor's fault because of the large assignment. We claim that our busy lives do not allow us reasonable time to do our own work. Well, I guess that I would respond with an age old statement, "Bull (finished off with you know what)" When you use someone else's material, you only need to mark it with quotation marks and cite it in the text as being written by someone other than you. It takes more effort to sneeze than it does to make sure that you don't plagiarize. The sign of the professional is the ability to present information that is correct and original. Always remember that you are an engineer; you are a Professional.

Nominate

your favorite professor for the 2020 Withrow Teaching Excellence Award!

Deadline:

Friday, Nov. 15

To access the Nomination Form:

1) Go to the ME Website:

https://www.egr.msu.edu/me/

2) Click on Undergraduate

3) Click on Forms and Policies

4) Select Withrow Nomination

THANKS!

A Thermochemical Option for Grid Scale Energy Storage

by Dr. Joerg Petrasch

Transitioning to a clean, climate friendly, and sustainable energy system is arguably the central engineering challenge for the first half of the 21st century. Already now, wind and solar photovoltaics are the cheapest sources of electricity. However, the sun does not always shine and the wind does not always blow. What stands in the way of complete renewable dominance is the lack of a cost-effective and large-scale technology to store electricity.

MSU ME professors **James Klausner** and **Joerg Petrasch** have teamed up with Arizona State Professor **Christopher Muhich** to develop this technology. Their ARPA-E funded STORES (Scalable Thermochemical Option for Renewable Energy Storage) project takes an unconventional approach to electricity storage. In contrast to batteries that rely on electrochemical storage, STORES is a thermochemical storage technology. "Compared to batteries, we sacrifice some efficiency to obtain a technology that is vastly more scalable, integrates much better with the existing power infrastructure, and only uses cheap and abundant materials that can be recycled easily," Joerg Petrasch the project PI says. While batteries can achieve round-trip efficiencies of around 80% the STORES technology will typically achieve round-trip efficiencies of 40-50%, depending on the type of power plant they are integrated with.

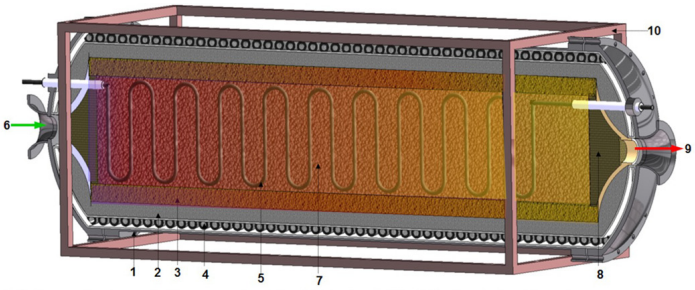

1. Carbon steel enclosure, 2. Microporous insulation, 3. Refractory bricks, 4. Cooling air circulation tubes, 5. Molybdenum disilicide heating elements, 6. Compressed air inlet (from compressor), 7. Magnesium manganese oxide reactive material, 8. Ceramic grit support, 9. Heated air outlet (to turbine), 10. Supporting frame (standard shipping container dimensions)

GRAPHIC PROVIDED BY DR. PETRASCH

Figure 1 STORES thermochemical storage module

The STORES module is a shipping container-sized pressure vessel that goes in the place of the combustor in a gas turbine-based power plant. The STORES vessel is filled with a unique Magnesium-Manganese-Oxide redox storage material. When renewable electricity is abundantly available, the storage material is electrically heated to temperatures up to 1500 C. The heat drives a highly endothermic reduction reaction during which oxygen is released and energy is stored chemically and as heat. When no renewable electricity is available this chemical reaction is reversed: Air from the compressor of the gas turbine cycle is fed through the STORES module. Oxygen reacts with the storage material and the energy stored is released as heat. The air is heated up and expanded in a gas turbine to recover the stored electricity. Approximately 75 shipping container-sized modules will provide 10 hours of storage for a 100 MWh gas power plant. In comparison, pumped storage hydropower, the only currently available large-scale energy storage technology requires at least 100 times the volume in water to store the same amount of energy.

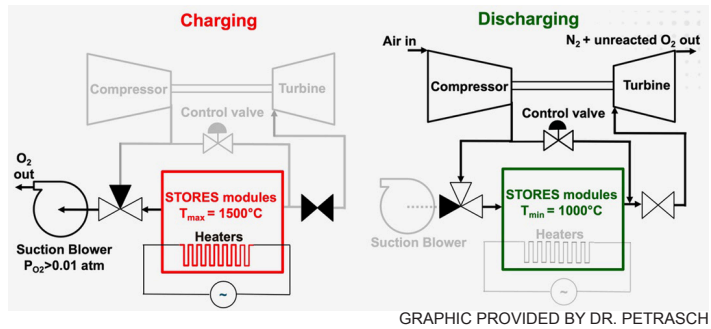

GRAPHIC PROVIDED BY DR. PETRASCH

Figure 2 Integration of STORES module into a simple gas power cycle.

Thermochemical storage for power plants has been studied for many years with mixed results. A unique feature of the STORES material is its cyclical stability. Metal oxide redox storage materials tend to lose storage capacity after only a few cycles. The materials tend to sinter at high temperatures, their internal surface area and hence their ability to take up and release oxygen often reduces after only a few cycles. "We have demonstrated hundreds of cycles with only a few percent loss in storage capacity. We think that Magnesium oxide with its high sintering temperature may stabilize the cyclical behavior. Furthermore, we have observed regeneration after deactivation at high temperatures by simple cycling." STORES team member **Dr. Kelvin Randhir**, MSU Post-Doc and originator of the idea of combining MgO and MnO explains.

While STORES is currently certainly the most important project in Dr. Petrasch's lab, his research interests are broader. He is also interested in other forms of chemical energy storage, in particular using Ammonia as a carbon neutral fuel. Furthermore, he strongly believes that intelligent control of existing thermal technologies can be used effectively for buffering renewable electricity: he has spent several years in pioneering the idea of autonomous price-driven demand side management. In his lab, he combines fundamental modelling of heat and mass transfer in porous and disperse media, particularly using tomography-based direct simulation with engineering oriented experimental research that makes use of state-of-the-art model-based control. "Basically, my goal is to develop the missing technologies that will enable the final breakthrough for renewables!" he says. His PostDoc **Dr. Nima Rahmatian** adds "What I particularly enjoy is the combination of modelling and experimental work, they go hand in hand and complement each other."

Dean's List

Congratulations to these 525 ME majors who made the Dean's List after Spring and Summer 2019. To be on the Dean's List, you must have a semester GPA of 3.5 or better. This list is from September 13. For updates, go to: http://www.reg.msu.edu/ROInfo/GradHonor/DeansList.aspx

SPRING 2019: David Abatan, Ben Abdallah, Alec Adgate, Mohamed Alameeri, Ali Alhajji, Renad Alhassani, Jimmy Almacddissi, Ghali Alwajih, Naif Alzahrani, Jack Aman, Junchi An, Tony Anason, Nathan Ansbro, Kyle Anulare, Miran Anwar, Matthew Arenz, Garrett Armock, Rachel Arnold, Mimi Asante, Austin Aselage, Albert Asta, Mickey Atnafe, Ally Austin, Samantha Baalmann, Michael Bachleda, Alec Bailey, Michael Batina, Julia Beach, Jenna Beauregard, Jack Beddow, Madison Begin, Jack Beison, Paul Beiter, Matthew Belknap, Allison Bell, Marcell Benkes-Toth, Ian Beshears, Olivia Bianchini, Frank Biondo, Elco Blanco, Amber Bliven, Daniel Blondell, Natalie Bobowski, Leo Bolduc, Adam Bolyard, Jordan Bommarito, Zach Borgerson, Nick Boston, Matt Bradford, Stephen Branch, Hernan Brarda, Zac Brei, Frederick Bruner, Nik Buchholz, Nathan Buchweitz, Abbey Bugenske, Brody Burke, Thomas Burke, Ian Burress, Taylor Burris, Cam Cabana, Conner Cadieux, Connor Campbell, Jacob Campion, Oriol Canellassalles, Yuandalei Cao, Zachary Carpenter, Jacob Caurdy, Rohan Challa, Trevor Chamberlain, Lauren Chance, Brad Chapman, Claudia Chen, Adam Childress, Josh Ciaccio, William Cilia, Anna Citko, Sydney Clark, Nathaniel Clarke, Emma Clawson, Garrett Colasinski, Jeremy Coleman, Sean Colling, Paige Cordts, Sean Cornellier, Thomas Corner, Mathias Cornet, Graham Cornish, Tommy Coughlin, Cayla Coury, Noah Crusoe, Jake Cuffaro, Vince Cushing, Jack Dailey, Jenna Dalrymple, Trevor Dame, Ha Dang, Zach Daniels, Sarah Daugherty, Devon Davenport, Will Davis, Andrew Debaker, Rosalie Deliz, Drake Deming, Jacob Demski, Cam Depauli, Marissa Depolo, Jessica Derkacz, Joseph Deschaine, Antonino Destasi, Kathleen Dewan, Alhassan Diallo, Matthew Donahue, Caitlynn Dubie, Tyler Dubois, Andrew Duke, James Ellison, Rachel Emerick, Nathan Engler, Eric Ernvall, Will Erskine, Christopher Fadanelli, Stacy Fakhoury, Mike Falter, Zhemeng Fan, Ryan Fantin, Alayna Farrell, Brian Fedewa, Alex Feige, Ben Finkbeiner, Arianna Finn, Brad Fischer, Zach Flowers, Patch Floyd, Brianna Forsthoefel, Matt Forsyth, Allison Fox, Jake Frelich, Alexis French, Zack Friess, Will Gadbois, Hanna Gehrke, Nick Gerich, Haram Gil, Kole Gilbert, Justin Gilgallon, Veronica Giordano, Tyler Gleason, Alec Gomez, Spencer Goosen, Garrett Gould, Anna Graffeo, Jim Graham, Levi Graves, Marissa Grazioli, John Gregor, Demarcus Gregory, Jacob Grimmer, Roman Grishin, Robert Gustke, Neil Haakenson, Andrew Hallam, Tal Hanani, Hunter Hansen, Derek Hanson, Brian Hanton, Paige Hartman, Jack Hasselbring, Parker Hatherley, Braden Heiler, Douglas Heine, Ryan Heinze, Bella Henry, Jadyn Henry, Rob Hernandez, Max Herzog, Lazerick Hill, Fritz Hittner, Chloe Ho, Jacob Hoffman, Laura Hohnstadt, Nate Holloway, Caleb Holtschlag, Aaron Hopson, Nick Houghton, Brett Howe, Michelle Huang, Shuaiwen Huang, Jill Hubbard, Noah Hubbard, Evan Huckins, Rhylan Huss, Samir Hussain, Rolanda Hutson, Reed Hylka, Roland Ingram, Angel Jaime, Owen Jarl, Miguel Jarquin-Lopez, Jonathan Jenkins, Nathaniel Jenkins, Sam Jenner, Alex Jennings, Griffin Jones, Muhammad Kamarudzaman, Kelsey Karasek, Tom Karbon, Daniel Karczmarczyk, Caleb Karthabortles, Anthony Kasiyan, Allison Keller, Jacob Keller, Max Kempisty, Ethan Keppy, Nolan Kerwin, Danielle Keusch, Alex Kintner, Justin Kinville, Andrew Kistler, Natalie Knisley, Katlyn Knudsen, Jason Koberstein, Alexandra Konopka, Ryan Koschay, Nicole Kowalski, Jennifer Kozlowski, Tj Krawczyk, Alex Kriese, Zak Kubiak, Dean Kuharevicz, Dave Kumiega, Cyndi Kunz, Kylie Kuskowski, Spencer Labuda, Nathan Lafalce, Evan Lamb, Andrew Lamkin, Raj Lamport, Ryan Langan, Oliver Larroquette, Candace Latnie, Ethan Lau, Connor Laubach, Emily Leblanc, Mitch Leblanc, Andrew Lee, Jay Lee, Alec Levasseur, Cam Lewis, Weiyu Li, Tyler Lim, Sean Lishawa, Dylan Lott, Austin Lowien, Fanghan Lu, Jared Ludacka, Christian Luedtke, Kendall Lusk, Ryan Lux, Landon Luyckx, Kaidi Ma, Mark Macharia, Michael Maes, Logan Malak, Patrick Marchal, Erin Maroney, Maria Martinpereira, Michael Mazza, Molly Mcclorey, Mark Mccloskey, Reid Mcdonnell, Hannah Mcgraw, Ash McKesson, Autumn Mclane-Svoboda, Madison Mcmahan, Claire Mcmillen, Douglas Mcnanney, Helen Miller, John Miller, Robby Miller, Hailey Minton, Luke Monroe, Bradley Moore, Nehemiah Mork, Morrice Morris, Parker Morris, Jacob Morrison, Ethan Mulder, Radhika Murgai, Greta Myran, Alex Napolitan, Josue Natarenmoran, Jacob Nelson, Daniel Nicklowitz, Allison Nielsen, Lila Ninotti, Sarah Nold, Garrett Novak, Tanner Nurnberger, Nick Occhiuto, David Odonnell, Madeline Oesch, Tim Ohtake, Brandon Okray, Kyle Oliynyk, Ginnie Olszewski, Julia Omara, Bryce Oneill, Ana Otero, Vanessa Pariso, Meghan Parkinson, Owen Parmeter, Eric Parsons, Mark Pastoria, Mike Pastoria, Mausam Patel, Smitkumar Patel, Kyle Patton, Jacob Pawloske, Ricardo Pazweber, Josh Peckens, Alp Pergel, Mason Perillo, Vincent Pernicano, Kyle Peters, Blake Peterson, Zach Petroelje, Sammie Pfeiffer, Julie Pham, Eli Pickard, Lehomm Pickard, Andrew Pieper, Rhett Pimentel, Joey Pinakidis, Race Piontkowski, Sarah Plant, Austin Pollock, Kurtis Potier, Sean Powers, Jake Prusakiewicz, Jax Prusakiewicz, Ryan Qamar, Andrew Quang, Connor Quigg, Daniel Quinn, Max Ralya, Liam Ranik, Preston Rashkov, Abhyuday Rastogi, Katianne Rausch, Aj Raykovich, Derek Raymond, Matt Razz, Carter Reeds, Sydney Rehr, Isaac Reichow, Brooks Reno, Olivia Reyes, Austin Rhodes, Matt Rice, Alyse Richards, Matthew Rightor, Noah Rimatzki, Sam Rinke, Maggie Ritchie, Max Robinson, Jeffrey Rockwell, Brett Roginski, Danielle Rosebrook, Ryan Rowe, John Royston, Garrett Ruhala, Owen Ruster, Jack Rutkowski, Jake Rutkowski, Brendan Rybicki, Brendan Ryder, Chris Sadler, Alyssa Salciccioli, Tariq Salim, Zach Samp, Andrew Sare, Gavan Sarrafian, Harrison Schaub, Elizabeth Schester, Matt Schram, Kyle Schreur, David Schulte, Andrew Schultz, Deshawn Schwan, Hannah Scott, Nicole Shaffer, Hammer Shalawylo, Samar Sheikh, Yutao Shen, Alex Sicklesteel, Jack Sikkema, Tyler Siluk, Ryan Simon, Carly Smith, Thomas Smither, Steven Souphis, Adam Speaks, Frank Spica, Carson Stachelski, Mckyle Stanfield, Ryan Stawara, Jared Steen, Connor Steffens, Nick Stein, Connor Stevenson, Justine Stewart, Jayme Stiglich, Steven Stine, Lucas Stjohn, Stephen Stormzand, Cooper Strebeck, Jake Stuifbergen, Madeline Stump, Neil Stump, Sarvesh Subramanian, Emily Suchoski, Brandon Surhigh, Akhilesh Swaminathan, Hailey Swamy, Alexia Swiat, Blake Swift, Caden Swindell, Kassidy Swinyer, Paul Sytsma, Moe Tabateh, Kengo Takenouchi, Stephen Tamboer, Pankti Tank, Charlie Tappan, Jordan Thayer, Heidi Theisen, Jonathan Theoret, Nick Thiel, Jessica Thomas, Lars Thornton, Emma Todd, Kyle Tomaszewski, Alex Toth, Michael Trajkovski, Trent Treppa, Cynthia Trocinski, Tommy Tsuchiya, Ryleigh Turner, Matthew Urdea, Brian Valentine, Nick Van Oost, Mark Vanbuskirk, Daniel Vance, Alaura Vannest, Ethan Vassallo, Vijay Vatti, Marc Veihl, Bobby Vette, Alex Vu, Ryan Wade, Atharva Wadhokar, Jules Waelchli, Brock Walquist, Robert Walston, Connor Walters, Katharine Walters, Qinda Wang, Vanessa Wang, Wayne Wang, Yen-Cheng Wang, Zhenyu Wang, Bryan Warholak, Grace Warmann, Ben Washington, Jeremiah Waterman, Joe Watza, Brent Weakland, Demetria Webster, Megan Weiss, Nic Weller, Stephen Wernette, Jacob Wescott, Coleson White, Mike Wichman, Jay Wideman, Nic Wiggins, Leah Williams, Connor Wilson, Chase Wilterdink, Gabbie Wink, Jeremy Wolf, Ross Wolniakowski, Joshua Woodford, Kyle Woods, Willis Wuebben, Zach Wurtz, Hannah Wyatt, Shangyu Xie, Zhihao Xu, Griffin Yakey, Volkan Yildirim, Che-Kuan Yu, Zhengwei Yu, Tahha Zahid, Gary Zakarian, Ross Zalewski, Marcelo Zapiainpruneda, Gabrielle Zapolnik, Abdelrahman Zebdi, Connor Zehr, Austin Zeitler, Lesheng Zeng, Ryan Zerona, Yu Zheng, Xichen Zhu, Evelyn Zielinski, Val Zilkovski, Chizun Zou, Yifan Zou.

SUMMER 2019: Emily Leblanc, Gi Lee, Helen Miller, Xiaoyu Xiong, Lucas Zheng.

Baja SAE

The MSU Baja Racing Team is an official SAE Collegiate Design Team which designs, builds and competes with an off-road Baja buggy each year. The team, which is student led, provides a unique opportunity for engineers to develop crucial hands on designing and manufacturing experience preferred by many companies, as well as leadership opportunities. The team has been hard at work this year and will soon be unveiling our car for this year. Starting in the fall, students have learned how to use NX and FEA on a real world application and consider the manufacturing methods to make each part. After that, students are taught how to operate the machines in our shop to make their parts and how to interact with companies to order parts. The Baja team is a great opportunity for developing skills learned in the classroom and for building a professional network. *Submitted by Zac Brei, Project Manager.*

PHOTO PROVIDED BY ZAC BREI

ASME

The American Society of Mechanical Engineers is an organization that enables collaboration, knowledge sharing, career enrichment, and skills development across all engineering disciplines, specifically geared toward mechanical engineers. ASME here at MSU gives mechanical engineers the opportunity to connect with each other and get involved on campus. Each semester we host student design competitions, such as junkyard wars or a 3D printing competition. We also volunteer at community schools to help young people get interested in engineering and host corporate information sessions for our members to learn more about industry and connect with employers. ASME is a great way for mechanical engineers to build their resumes and make an impact on the community. We are hosting a festival called E-Fest North for the second year in a row April 5th-7th and we are going to need a lot of volunteers. Please visit our website or Facebook to learn how to get involved with ASME! *Submitted by Matthew Good, Publicity Chair.*

Teaching Award Nomination Form:

Graduate Studies in Mechanical Engineering at MSU by Drs. Daniel Segalman & Patrick Kwon

For some students, it is not easy to invest additional years for graduate degrees. However, if you are the type of student who is interested in the logic behind the analysis techniques in the courses you took, a graduate degree may lead you to a more fulfilling career in research and development in private industry, a national laboratory, or even research and teaching in an academic institution like MSU.

"A graduate degree may lead you to a more fulfilling career."

In fact, all of the faculty members in ME took this route of pursuing their graduate degrees. Graduate work will engage you in research that pushes the boundaries of science and engineering and leads to new knowledge creation.

The Department of Mechanical Engineering offers programs leading to Master of Science (M.S.) and Doctor of Philosophy (Ph.D.) degrees in both mechanical engineering and engineering mechanics. An individualized plan of study can be designed from a wide range of courses and research experiences to suit the professional aspirations of graduate students. The course work within and external to the department are designed to prepare you for your research work.

The ME department offers research experiences in four broad areas: Fluid Thermal Science & Engineering, Biomechanics Engineering, Dynamic Systems & Controls, and Solid Mechanics, Design, & Manufacturing. The research opportunities are diverse, and they can range from working closely with an individual faculty member and/or as part of a team in a large interdisciplinary research center.

Deadline: Nov 15

Students pursuing an M.S. degree are expected to complete their requirements within 1 ½ to 2 years, mainly with two options, (1) coursework only with 30 credits hours and (2) thesis or project option with 24 credit hours of course work and 6 credits of project or research credits. Many qualified students can be admitted directly into the Ph.D. program. The Ph.D. is a research-based degree with specific course requirements set by a research advisor and committee to support the student's area of research.

If you want to pursue a Ph.D. degree, the ME department will support your tuition and stipend. *Thus, it is free with the stipend adequate to support you and your comfortable life style as long as you can commit 4 to 5 years for a Ph.D.*

ME department faculty at MSU are unusually collegial, being very supportive of each other and each other's students.

The deadline for application is December 31 of the previous year. If you have any questions, contact **Stacy Hollon** at hollonst@egr.msu.edu or **Patrick Kwon** at pkwon@egr.msu.edu.

MICHIGAN STATE UNIVERSITY Design Day COLLEGE OF ENGINEERING

Friday, December 6, 2019
Engineering Bldg

Come and see our students lead, create, and innovate

- Competitions
- Demonstrations
- Presentations
- Awards

SAE International™

Formula SAE

Michigan State Formula Racing proudly represents Michigan State University in Formula SAE, the world's largest collegiate design series, which challenges students to design and build a small, open-wheel race car from the ground up each year.

For over 30 years, our organization has provided students the opportunity to apply classroom principles to problem solving scenarios in a fast-paced work environment. As a result, experienced members of our team are poised to make an immediate impact in the workforce through their in-depth understanding of engineering, manufacturing, and project management.

This past Saturday, our 2019 racing vehicle, the SR-19, competed in its final race - the Toronto Shootout in Brechin, ON. Our team finished 3rd overall and earned the 2nd fastest lap-time of the day. This marks our fifth finish on the podium at this event in five total appearances.

With the design of our next vehicle, the SR-20, coming to a close in the coming weeks, we are poised for a successful racing season in 2020. Due to our experienced leadership, support from MSU and corporate partners, and our Spartan drive to succeed, we believe the SR-20 will be our fastest vehicle yet.

Be sure to follow us on social media for updates on team activity throughout the season! @msuformularacing on Facebook and Instagram.

Go green. Go white. Go fast!

Submitted by Christopher McCloskey, Project Manager & Chassis Team Lead

PHOTO PROVIDED BY DAVE YONKERS

MSU – RWTH Aachen Program by Prof. Brian Feeny, Program Director

Students in the exchange program with RWTH Aachen, Germany, go to Aachen in the summer and work on an applied engineering project at an advanced facility. The program takes place from mid-May to end of July 2017. Participants earn 5 credits of independent study plus 4 credits of German language.

The motto is "Work hard, play hard!" The project work will involve interaction with fellow engineering students from around the world at RWTH-Aachen, a premier European technical university. Participants will also have some three-day weekends, and the European railway provides access to Munich, Paris, Amsterdam, Zurich, Rome, and many more destinations, as well as natural attractions like Verndon Gorge in France, the Alps, Germany's Jasmund National Park, or Stromboli in Italy. The program partners with RWTH's UROP (Undergraduate Research Opportunities Program) which facilitates interactions with undergraduate students on research projects in Aachen who are visiting from other North American universities as well, provides on-campus housing, and organizes optional activities.

MSU ME students with a 3.0 GPA or higher and a "mature" junior or senior status are eligible. To offset some of the program costs, scholarship funds are available through the North American Rockwell Endowment.

If interested, try to attend the information session to be announced shortly. Otherwise, please contact me at feeny@egr.msu.edu or 517-353-9451, or talk to former exchange students. This is a great opportunity!

Figure 1. RWTH north campus.

PHOTO PROVIDED BY DAVE YONKERS

Undergraduate Program Educational Objectives
Department of Mechanical Engineering
Michigan State University

(Approved by the ME Department Faculty on December 10, 2015)

Our graduates will:

- *Be competent and ethical engineers practicing in a diverse range of activities.*
- *Use their mechanical engineering education as a stimulus for personal and professional growth.*
- *Be recognized for their capability, creativity, and application of knowledge.*
- *Be independent and critical thinkers who identify problems and develop effective solutions.*

Michigan State University
Department of Mechanical Engineering

CRYOGENIC ENGINEERING CONCENTRATION

(12 Credits)

A mechanical engineering degree with the cryogenic engineering concentration signifies the interests and expertise of students in thermal and mechanical analysis and design techniques as applied to cryogenic engineering applications. To complete a Bachelor of Science degree in mechanical engineering with an engineering mechanics concentration, students must complete the requirements for the B.S. degree, including the following 12 credits:

•ME	413	Cryogenic-Thermal Systems	3 credits (Spring Only)
•ME	414*	Mechanical Design of Cryogenic Systems	3 credits (Fall Only)
•ME	416*	Computer Aided Design of Thermal Systems	3 credits (Fall Only)
•ME	442*	Turbomachinery	3 credits (Spring Only)

CREDIT DISTRIBUTION: The 12 credits in the concentration will fulfill the Senior Elective requirement, including the “design intensive” course component. Completion of the option will be noted on the final transcript.

The asterisk (*) signifies that the course is design intensive.

Curriculum\Cryogenic Concentration.indd
(1/26/18)

Michigan State University
Department of Mechanical Engineering

ENGINEERING MECHANICS CONCENTRATION

(12 Credits)

Leonardo DaVinci reportedly described the study of mechanics as "the paradise, the Garden of Eden of mathematics, for therein it bears its fruit." The engineering mechanics concentration is designed to provide undergraduate students with a more thorough understanding of analytical, computational and experimental methods for investigating the response of structures and fluids to external forces, pressures, thermal effects and other environmental loads. These skills have applications in all areas of mechanical engineering as well as in many interdisciplinary fields, and they are the key to modern mathematics-based design processes that are used by all major engineering firms. This concentration is also well suited for preparing students for graduate study in mechanical engineering or engineering mechanics.

To complete a Bachelor of Science degree in mechanical engineering with an engineering mechanics concentration, students must complete the requirements for the B.S. degree, including the following 12 credits:

- ME 423 Intermediate Mechanics of Deformable Solids – 3 credits (Fall Semester)
- ME 475* Computer Aided Design of Structures – 3 credits (Fall Semester)
- ME 425 Experimental Mechanics – 3 credits (Fall Semester)
- ME 464 Intermediate Dynamics – 3 credits (Spring Semester)

CREDIT DISTRIBUTION: The 12 credits in the concentration will fulfill the Senior Elective requirement, including the "design intensive" course component. Completion of the option will be noted on the final transcript.

*Design intensive.

Curriculum\EM_Concentration.indd
(7/29/15)

SPRING SEMESTER SENIOR ELECTIVES

▶The asterisk (❊) after a course number indicates that it has been officially designated as "Design Intensive."

ME 413 Cryogenic-Thermal Systems. 3(3-0). Prereq: (ME 410 or concurrently). *Hasan/Knudsen.*

ME 417❊ Design of Alternative Energy Systems. 3(3-0). Prereq: (ME 410 or concurrently).*Toulson.*

ME 426 Introduction to Composite Materials. 3(3-0). Prereq: (ME 222). *Xiao.*

ME 433 Introduction to Computational Fluid Dynamics. 3(3-0). Prereq: ME 410 or concurrently. *Gao.*

ME 441 Aerodynamics and Aircraft Performance. 3(3-0). Prereq: (ME 332). *Allison.*

ME 442❊ Turbomachinery. 3(3-0). Prereq: (ME 332). *Mueller.*

ME 445❊ Automotive Powertrain Design. 3(3-0). Prereq: ME 444. *Schock.*

ME 456❊ Mechatronic System Design. 3(2-3). Prereq: (ECE 345 or concurrently) and (ME 391 or concurrently). *Zhu.*

ME 464 Intermediate Dynamics. 3(3-0). Prereq: (ME 361). *Khasawneh.*

ME 465❊ Computer Aided Optimal Design. 3(3-0). Prereq: (ME 222 and ME 280) and (ME 370 or concurrently). ***Online Course.*** *Averill.*

ME 477 Manufacturing Processes. 3(3-0). Prereq: (ME 222) and (MSE 250). *Guo.*

ME 478❊ Product Development. 3(3-0). Prereq: (ME 477). *Chung.*

ME 490 Independent Study. 1-4 credits. *See Override Instruction #2 below*. You may reenroll for a maximum of 6 credits.

ME 491❊ Selected Topics in Mechanical Engineering. Section 001 (***1 credit***): Integrated Systems Design. *See Override Instruction #1 below*. Students should consider taking this course for three semesters to receive a total of 3 credits and fulfill the design intensive senior elective requirement. This is a project based course and students should be available outside of class for team meetings, project work, and design reviews. Prereq: None. *Recktenwald/Resh.* **▶SEE PAGE 6 FOR MORE INFORMATION!**

ME 495 Tissue Mechanics. 3(3-0). Prereq: (ME 222). ***Biomedical Concentration Course***. *Grimm.*

ME 497❊ Biomechanical Design in Product Development. 3(3-0). Prereq: (ME 370 or concurrently) or (ME 371). ***Biomedical Concentration Course***. *Bush/Nguyen.*

BE 444 Biosensors for Medical Diagnostics. 3(3-0). Prereqs: (BS 161) and (CEM 141) and (ECE 345). ***Biomedical Concentration Course.*** *Alocilja.*

CE 407 Materials Engineering: Properties, Selection and Processing. Prereq: (CE 221) and (ME 222). Recommended Background: MSE 250. *Lu*.

CHE 483 Brewing and Distilled Beverage Technology. *See Override Instruction #3 below*. See the Schedule of Courses for location information. Prereq: (Age 21 or higher) and (Senior standing) and (ME 410-Heat Transfer or concurrently). *Shriner.*

ENE 422 Applied Hydraulics. 3(2-2). Prereq: ME 332. *Mantha*.

MSE 465 Design & Application of Engineering Materials. 3(3-0). Prereq: MSE 250. *Eisenlohr.*

Graduate Level Courses: Honors College members and/or students with 3.5+ GPAs might consider taking a graduate course as a senior elective. Before enrolling, several signatures, including that of the instructor, are required. Possible choices for Spring 2020 nclude ME 814, 825, 861, and 872. *See Override Instruction #4 below*.

SENIOR ELECTIVE OVERRIDE INSTRUCTIONS

1) General Override Request Procedure: Complete and submit the ME Override Request Form: https://www.egr.msu.edu/me/me-override-request Please note that the ME department cannot overfill required courses to resolve conflicts with Senior Electives, Other Electives, Integrative Studies courses and employment schedules.

2) ME 490–Independent Study Enrollment Procedure: Find a professor who is willing to supervise your independent study, and discuss your plans with him/her. Complete an *ME 490/490H Enrollment Contract* (independent study form), available in the ME Advising Office in 2560 EB. After you and your professor have completed and signed both sides, return the form to the ME Advising Office for the remaining signatures, override, and enrollment.

3) CHE 483–**This course has a maximum enrollment of 100. When it is full, no additional overrides will be given**. You can still set an alert via Schedule Builder, but it would be a good idea to enroll in a back-up course.

4) Complete the *Graduate Course Override* form, available in the ME Advising Office in 2560 EB. This is a paper form.

Department of Mechanical Engineering

MICHIGAN STATE
UNIVERSITY

ME Advising Office
Dept of Mechanical Engineering
Engineering Building
428 S. Shaw Lane, Rm 2560
East Lansing MI 48824-1226

Fall Semester Calendar

November 8	All currently enrolled students who have not enrolled by 8 p.m. in at least one course for Spring will pay a $50 late fee.
November 15	**Deadline for Withrow Teaching Award Nominations.** The nomination form is on the ME website (https://www.egr.msu.edu/me/). [Click on Undergraduate, and then Forms and Policies.]
Nov 28-29	Thanksgiving recess
December 6	**Last day of classes & Design Day.**
December 14	Undergrad Commencement Ceremony-Breslin at 2 pm. Lasts about 2 hours. No tickets required.
Dec 9-13	Final Exams
Dec 14-Jan 5	Semester Break
January 10	On-line Open Add Period for Spring 2020 ends at 8 p.m. **ALSO**, this is the deadline for May 2020 and August 2020 graduates to apply for graduation.
March 9	Scheduled Computer/Telephone Enrollment period for summer semester begins.
March 27	Computer Enrollment period for fall/spring 2020-2021 begins. Your enrollment access date will be posted on StuInfo in mid-March.