Student ID _____

Department of Mechanical Engineering
Michigan State University
East Lansing, Michigan

Ph.D. Qualifying Exam in Fluid Mechanics

- Closed book and Notes, Some basic equations are provided on an attached information sheet.
- Answer all questions.
- All questions have the same weighting.

Exam prepared by

Professor I. S. Wichman
Professor A. Naguib

January 2016

Problem 1: 1. Non-dimensionalization: The flow rate Q (volume/sec) through a channel depends upon the gap h, the pressure gradient $|\Delta p|/L$, the viscosity μ.

a) Using dimensional analysis, derive the non-dimensional relationship for Q.

b) Non-dimensionalize the Bernoulli equation $p/\rho + V^2/2 = C_1 + p_o/\rho$ using the characteristic velocity U_o to normalize the velocity V. Assume constant density, ρ. Identify the *Euler number* in the dimensionless Bernoulli equation.

c) Finally, write the drag coefficient $C_D = F_D/[(1/2)\rho_o U_\infty^2 A]$, where A is a representative area, in terms of the *Euler number* of part (b) above and a suitably defined non-dimensional force. The units of F_D are $mass \times length/(time^2)$.

<u>Problem 2:</u> **<u>Viscous Flow over a Flat Plate:</u>** A fluid flows over one side of a flat plate with velocity $\vec{V} = \vec{i}\,u + \vec{j}\,v$ where $u = a(x)y$ and the velocity in the *z*-direction is $w = 0$. This flow satisfies the no-slip condition at the surface and there is no blowing or suction at the surface. Consider the case $da/dx < 0$.

a) Assuming incompressible flow and no slip and no blowing at the surface, derive the expression for the transverse velocity *v*.
b) Calculate the vorticity, if any, in this flow. Use the formula given below and comment on its behavior.
c) Derive the stream function (see below). Draw lines of constant ψ.
d) Derive the velocity potential ϕ, if applicable. Draw lines of constant ϕ, if applicable. If <u>not applicable</u>, discuss why there is no velocity potential for this problem.
e) Draw and describe a velocity field that this profile resembles or characterizes.

Vorticity: $\vec{\Omega} = \vec{i}\left(\frac{\partial w}{\partial y} - \frac{\partial v}{\partial z}\right) + \vec{j}\left(\frac{\partial u}{\partial z} - \frac{\partial w}{\partial x}\right) + \vec{k}\left(\frac{\partial v}{\partial x} - \frac{\partial u}{\partial y}\right)$

Stream function (Cartesian coordinates): $u = \frac{\partial \psi}{\partial y}, v = -\frac{\partial \psi}{\partial x}$.

Velocity potential: $u = \frac{\partial \phi}{\partial x}, v = \frac{\partial \phi}{\partial y}$.

Problem 3: A steady, incompressible, two-dimensional water jet (density = 1000 kg/m^3) impinges on a flat wall as shown in the figure. The jet emerges from a 20-mm wide slot with uniform velocity of 10 m/s but the velocity distribution becomes non-uniform after impingement such that the wall-parallel velocity varies with height above the wall as shown in the figure (for both the right (forward) and left (backward) flow). The jet impinges obliquely on the wall at an angle of 60 degrees which causes the stagnation point to shift away from the jet axis towards the backward-flow side. The streamline passing through the stagnation point tracks back to the jet exit at a point that is 5 mm away from the left jet lip. Assuming the streamlines to be parallel at the exit of the jet and at the points where the flow leaves the plate after impingement, and neglecting gravity effects and viscous losses, determine the following:

I) The maximum velocity (u_m) and its location above the wall (y_m) for each of the backward and forward flow;

II) The x and y anchor force components (F_x and F_y) *per unit plate width* required to hold the plate in place.

Hint: $\int x^n e^{ax} dx = \frac{e^{ax}}{a}\left(x^n - \frac{nx^{n-1}}{a} + \frac{n(n-1)x^{n-2}}{a^2} - \cdots + \frac{(-1)^n n!}{a^n}\right)$; $n > 0$

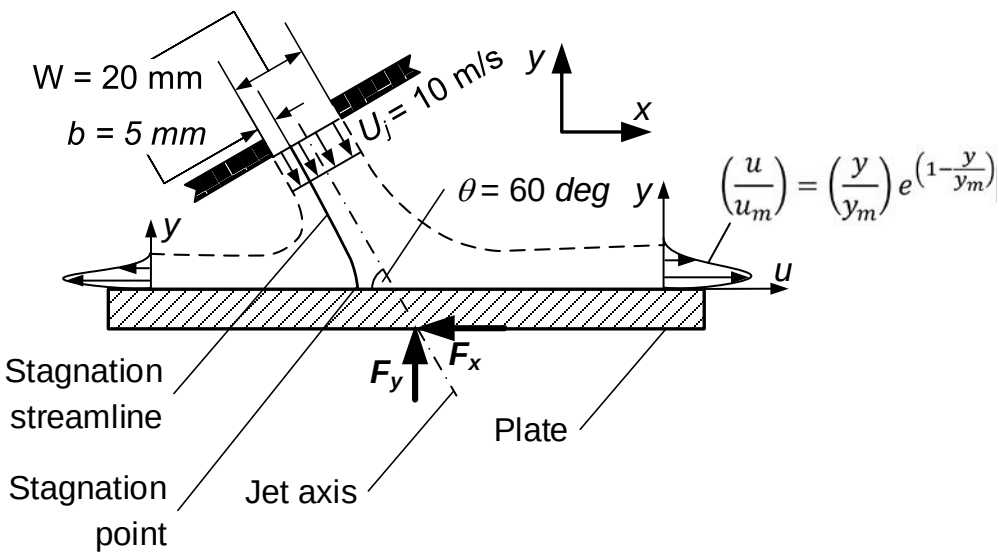

<u>Problem 4:</u> Consider steady, incompressible, two-dimensional boundary layer flow over a porous flat wall. Suction velocity v_w is applied through the porous wall such that the boundary layer does not grow in the streamwise direction and the flow becomes fully developed. Find an expression for the boundary layer streamwise-velocity profile. Assume the freestream velocity is U, and the fluid kinematic viscosity is ν. Also find an expression for the 99% boundary layer thickness and the wall shear stress.

Formula Sheet

Bernoulli Equation:

Bernoulli equation between two points, 1 and 2, on a streamline for steady, inviscid, compressible flow:

$$\frac{p_1}{\rho} + \frac{V_1^2}{2} + gz_1 = \frac{p_2}{\rho} + \frac{V_2^2}{2} + gz_2$$

Integral equations:

Mass: $0 = \frac{\partial}{\partial t}\int_{CV} \rho d\forall + \int_{CS} \rho \vec{V}.d\vec{A}$

Momentum: $\vec{F} = \vec{F}_s + \vec{F}_B = \frac{\partial}{\partial t}\int_{CV} \vec{V}\rho d\forall + \int_{CS} \vec{V}\rho\vec{V}.d\vec{A}$; with $\vec{F}_s$ due to pressure: $\vec{F}_{s,p} = -\int_{CS} p\, d\vec{A}$

Energy: $\dot{Q} - \dot{W}_{CV} = \frac{\partial}{\partial t}\int_{CV}\left(u + \frac{V^2}{2} + gz\right)\rho d\forall + \int_{CS}\left(h + \frac{V^2}{2} + gz\right)\rho\vec{V}.d\vec{A}$

Angular momentum: $\sum(\vec{r}\times\vec{F}) = \frac{\partial}{\partial t}\int_{CV}(\vec{r}\times\vec{V})\rho d\forall + \int_{CS}(\vec{r}\times\vec{V})\rho\vec{V}\cdot d\vec{A}$

Differential Equations - Continuity

Rectangular Coordinates (x, y, z):

$$\frac{\partial\rho}{\partial t} + \frac{\partial}{\partial x}(\rho v_x) + \frac{\partial}{\partial y}(\rho v_y) + \frac{\partial}{\partial z}(\rho v_z) = 0$$

Cylindrical Coordinates (r, θ, z):

$$\frac{\partial\rho}{\partial t} + \frac{1}{r}\frac{\partial}{\partial r}(\rho r v_r) + \frac{1}{r}\frac{\partial}{\partial\theta}(\rho v_\theta) + \frac{\partial}{\partial z}(\rho v_z) = 0$$

Differential Equations – Momentums for Incompressible, Constant Viscosity (μ)

Rectangular Coordinates (x, y, z):

$$\rho\left(\frac{\partial v_x}{\partial t} + v_x\frac{\partial v_x}{\partial x} + v_y\frac{\partial v_x}{\partial y} + v_z\frac{\partial v_x}{\partial z}\right) = \mu\left[\frac{\partial^2 v_x}{\partial x^2} + \frac{\partial^2 v_x}{\partial y^2} + \frac{\partial^2 v_x}{\partial z^2}\right] - \frac{\partial p}{\partial x} + \rho g_x$$

$$\rho\left(\frac{\partial v_y}{\partial t} + v_x\frac{\partial v_y}{\partial x} + v_y\frac{\partial v_y}{\partial y} + v_z\frac{\partial v_y}{\partial z}\right) = \mu\left[\frac{\partial^2 v_y}{\partial x^2} + \frac{\partial^2 v_y}{\partial y^2} + \frac{\partial^2 v_y}{\partial z^2}\right] - \frac{\partial p}{\partial y} + \rho g_y$$

$$\rho\left(\frac{\partial v_z}{\partial t} + v_x\frac{\partial v_z}{\partial x} + v_y\frac{\partial v_z}{\partial y} + v_z\frac{\partial v_z}{\partial z}\right) = \mu\left[\frac{\partial^2 v_z}{\partial x^2} + \frac{\partial^2 v_z}{\partial y^2} + \frac{\partial^2 v_z}{\partial z^2}\right] - \frac{\partial p}{\partial z} + \rho g_z$$

Cylindrical Coordinates (r, θ, z):

$$\rho\left(\frac{\partial v_r}{\partial t} + v_r\frac{\partial v_r}{\partial r} + \frac{v_\theta}{r}\frac{\partial v_r}{\partial\theta} - \frac{v_\theta^2}{r} + v_z\frac{\partial v_r}{\partial z}\right) = \mu\left[\frac{\partial}{\partial r}\left(\frac{1}{r}\frac{\partial}{\partial r}(rv_r)\right) + \frac{1}{r^2}\frac{\partial^2 v_r}{\partial\theta^2} + \frac{\partial^2 v_r}{\partial z^2} - \frac{2}{r^2}\frac{\partial v_\theta}{\partial\theta}\right] - \frac{\partial p}{\partial r} + \rho g_r$$

$$\rho\left(\frac{\partial v_\theta}{\partial t} + v_r\frac{\partial v_\theta}{\partial r} + \frac{v_\theta}{r}\frac{\partial v_\theta}{\partial\theta} + \frac{v_r v_\theta}{r} + v_z\frac{\partial v_\theta}{\partial z}\right) = \mu\left[\frac{\partial}{\partial r}\left(\frac{1}{r}\frac{\partial}{\partial r}(rv_\theta)\right) + \frac{1}{r^2}\frac{\partial^2 v_\theta}{\partial\theta^2} + \frac{\partial^2 v_\theta}{\partial z^2} + \frac{2}{r^2}\frac{\partial v_r}{\partial\theta}\right] - \frac{1}{r}\frac{\partial p}{\partial\theta} + \rho g_\theta$$

$$\rho\left(\frac{\partial v_z}{\partial t} + v_r\frac{\partial v_z}{\partial r} + \frac{v_\theta}{r}\frac{\partial v_z}{\partial\theta} + v_z\frac{\partial v_z}{\partial z}\right) = \mu\left[\frac{1}{r}\frac{\partial}{\partial r}\left(r\frac{\partial v_z}{\partial r}\right) + \frac{1}{r^2}\frac{\partial^2 v_z}{\partial\theta^2} + \frac{\partial^2 v_z}{\partial z^2}\right] - \frac{\partial p}{\partial z} + \rho g_z$$