Exam Number: ----------

Department of Mechanical Engineering

Michigan State University

Intermediate Solid Mechanics
Ph.D. Qualifying Examination

August 2016

You may use only **one** reference book.

All Questions are weighted equally

Prepared by

Alfred C. Loos

Ron Averill

1) A block of ductile AISI 1020 steel is confined on all four sides by a rigid die as shown in the figure. A uniform compressive stress σ_z is applied to the surface of the steel block, and it may be assumed that there is no friction between the steel block and the die. Determine a) the value of σ_z necessary to cause yielding using the maximum distortion energy criterion (octahedral shear stress criterion) and b) the normal strain ε_z at yielding. The properties of AISI 1020 steel can be assumed to be the same in tension and compression and are given as follows: elastic modulus, E = 203 GPa, Poisson's ratio ν = 0.29, yield strength σ_o = 260 MPa, ultimate strength σ_u = 441 MPa.

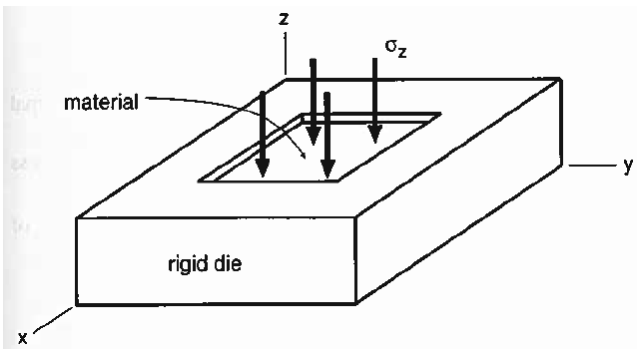

2) A wood cantilever beam of rectangular cross section supports an inclined load P at its free end. Data for the beam are as follow: b = 75 mm, h = 150 mm, L = 1.4 m, P = 800 N and θ = 30 °. Determine a) the angle β, measured from the horizontal z axis, giving the orientation of the neutral axis and b) the location and value of the maximum tensile stress due to load P.

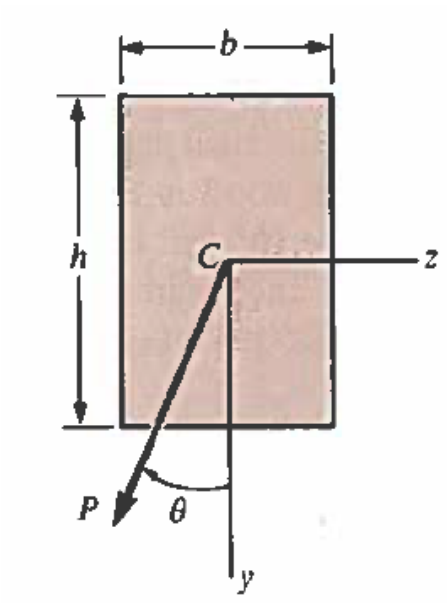

3) The cantilevered bar in the figure is made from a ductile material and is statically loaded with F_y=200 lbf and F_x=F_z=0. Analyze the stress situation in rod AB by obtaining the following information:
(a) Determine the precise location of the critical stress element.
(b) Sketch the critical stress element and determine magnitudes and directions for all stresses acting on it.
(c) For the critical stress element, determine the principal stresses and the maximum shear stress.

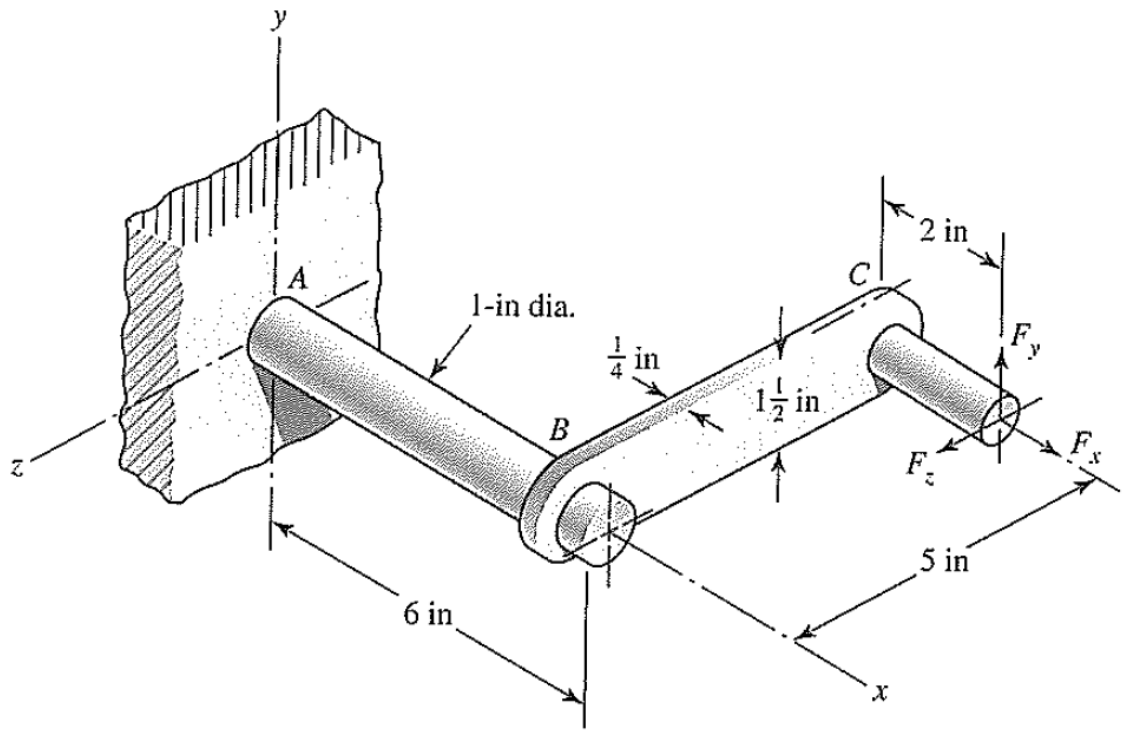

4) A horizontal rigid bar *AB* is pinned at end *A* and supported by two wires (*CD* and *EF*) at points *D* and *F*. A vertical load *P* acts at end *B* of the bar. The bar has length 3*b* and wires *CD* and *EF* have lengths L_1 and L_2, respectively. Also, wire *CD* has diameter d_1 and modulus of elasticity E_1; wire *EF* has diameter d_2 and modulus of elasticity E_2.

(a) Obtain formulas for the allowable load *P* if the allowable stresses in the wires *CD* and *EF*, respectively, are σ_1 and σ_2. Disregard the weight of the bar itself.

(b) Calculate the allowable load *P* for the following conditions:

E_1 = 72 GPa, d_1 = 4.0 mm, L_1 = 0.40 m, σ_1 = 200 MPa
E_2 = 45 GPa, d_2 = 3.0 mm, L_2 = 0.30 m, σ_2 = 175 MPa