Code Number :.....

HEAT TRANSFER QUALIFYING EXAM

August 2016

One book allowed

Answer all questions

All questions have equal weight

TIME: 3.0 hrs

Prepared by : Profs. J. Yeom and A. Bénard

Problem #1)

A pin fin of uniform diameter D, length L, and thermal conductivity k is connecting two identical devices of volume V_d and the area exposed to ambient air is given by A_d The electronic devices generate heat at the rate of $\dot{q}$ watts per unit volume.

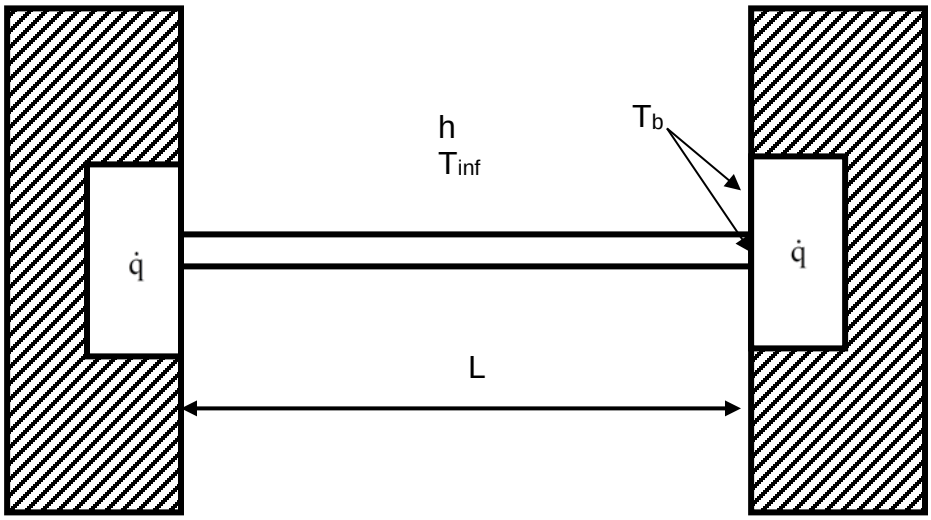

Find an expression that will estimate how much heat is evacuated through the fin. How much heat is evacuated through the surface surrounding the fin that is exposed to the environment?

Problem #2)

Air enters a heated circular tube at a mass flow rate of 0.015 kg/s and a mean temperature of 20ºC. The tube is of diameter D=30mm, and fully developed conditions with h=25W/m^{2}K exist over nearly the entire length of L=5m. Use Cp=1000 J/kgK, Pr=0.707, $\mu = 200 \times 10^{-7}\, N.s/m^2$.

If a surface heat flux varies linearly as q”=125x (x is the axial coordinate) over the top half of the tube (see diagram below), find the total heat transfer rate and the mean temperature of the air leaving the tube ($T_{m,out}$). What are the values of the tube inlet *surface* temperature and the tube outlet *surface* temperature?

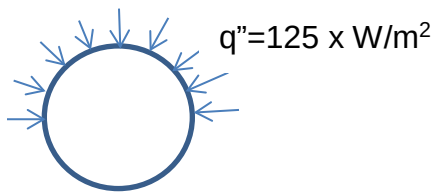

Write how you computed the appropriate Re number

Write the computation of your total heat transfer rate:

Write how you found the mean outlet temperature

Write how you compute the surface outlet and inlet temperatures:

Problem #3)

Two disks of the same size, 0.5 m in diameter, are aligned in parallel with the separation distance of 0.1 m and are located in a large room (Surface 3) whose walls are maintained at 400 K. One of the disks (Surface 1) is maintained at a uniform temperature of 600 K with the following spectral hemispherical emissivity: $\varepsilon_\lambda = 0.8$ for $\lambda \leq 3$ μm, $\varepsilon_\lambda = 0.55$ for 3 μm $< \lambda \leq 5$ μm, and $\varepsilon_\lambda = 0.21$ for $\lambda > 5$ μm. The back side of the second disk (Surface 2) is well insulated. The disk surfaces are diffuse and gray. Ignore convection.

What are the view factors, F_{12} (one disk to another disc) and F_{23} (disk to walls)?

What is the total, hemispherical emissivity of Surface 1?
\

Determine the temperature of the insulated disk (Surface 2).

Problem #4)

A spherical thermocouple (TC) junction 1.0 mm in diameter is inserted in a combustion chamber to measure the temperature T_∞ of the products of combustion. The hot gases have a velocity of V = 6 m/s.

If the TC is at room temperature, T_i, when it is inserted in the chamber, estimate the time required for the temperature difference, $T_\infty - T$, to reach 1% of the initial temperature difference, $T_\infty - T_i$. Neglect radiation and conduction through the leads. Properties of the TC junctions are approximated as k = 150 W/m·K, c_p = 405 J/kg·K, and ρ = 8220 kg/m^3, while those of the combustion gases may be approximated as k = 0.04 W/m·K, $\nu = 50\times10^{-6}$ m^2/s, and Pr = 0.69.

If the TC junction has an emissivity of 0.5 and the cooled walls of the combustor are at T_c = 400 K, what is the steady-state temperature of the TC junction if the combustion gases are at 1000 K? Conduction through the lead wires may be neglected.