Student ID _____

Department of Mechanical Engineering
Michigan State University
East Lansing, Michigan

Ph.D. Qualifying Exam in Fluid Mechanics

- Closed book, but one sheet (8.5” x 11”, front and back) of your own notes with equations permitted.
- Some basic equations are provided on an attached information sheet.
- Answer all questions.
- All questions have the same weighting.

Exam prepared by

Professor G. Brereton
Professor A. Naguib

January 2011

Problem 1:

The radiator fan on an automobile engine is a source of considerable noise. The noise power P produced by the fan depends on its diameter D and its angular velocity ω, as well as on the air density ρ and the speed of sound in air c.

1. Find the dimensionless variables that characterize the noise power P in this application, if ρ, D and ω are used as repeating variables.

2. If a real fan rotates at 1000 rpm in an engine in air under standard conditions, at what angular velocity should a 1/3-scale model be spun in air at the same conditions to achieve dynamic similarity?

3. What is the ratio P_{real}/P_{model} in these tests?

Problem 2:

Consider the two-dimensional, laminar, fully developed flow of water of uniform depth *d* down a plane inclined at an angle α to the horizontal. The velocity at the water surface is *U*.

1. Use the differential *x*-momentum equation to find the velocity profile.

2. Find the shear stress at the wall: i) with a control volume analysis; and ii) using the velocity profile.

3. Find the skin friction coefficient in terms of: i) α and the Froude number; and ii) the Reynolds number.

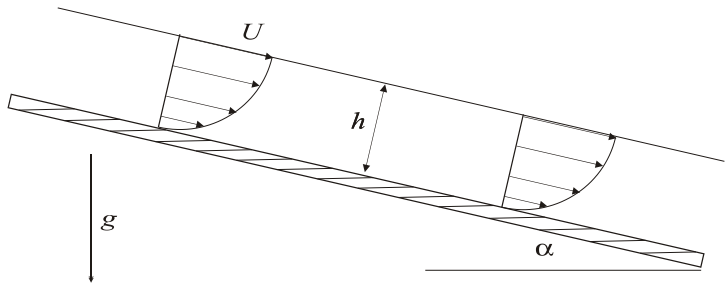

Problem 3:

Two circular coaxial liquid (density ρ) jets with speed V interact as shown in the figure. Liquid leaves the interaction region, which is open to the atmosphere, in a conical sheet. Obtain an expression for the angle θ of the resulting flow terms of d_2/d_1. Also, compute the tension in the cable and indicate the d_2/d_1 range over which this calculation valid.

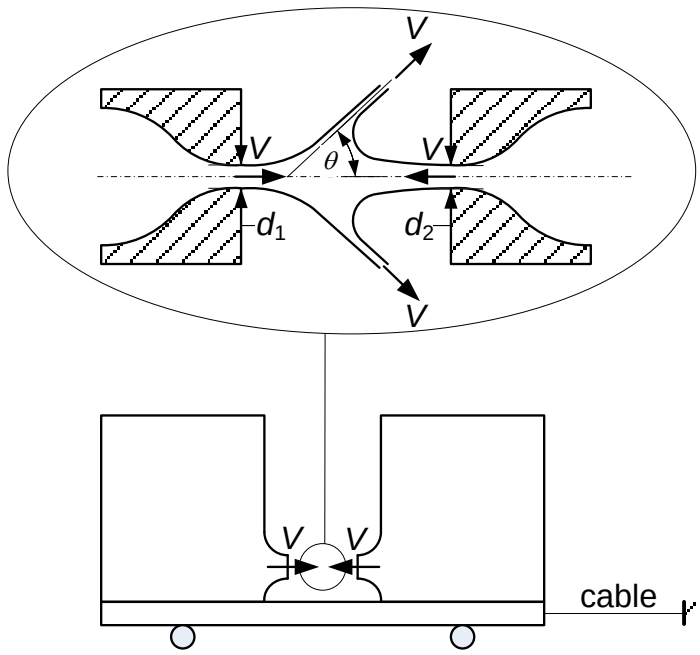

Problem 4:

Water (density = 1000 kg/m^3) flows from the pipe shown in the figure as a free jet and strikes a circular flat plate. The flow geometry shown is axisymmetric. Assuming, steady, incompressible and inviscid flow, determine the flow rate and the manometer reading *H*.

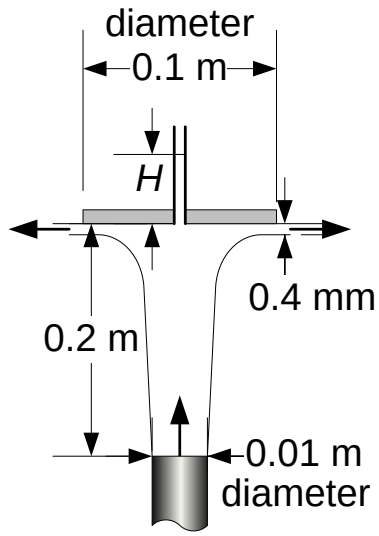

Problem 5:

A submarine is 100 m below the sea surface, as shown below. If the pressure inside the submarine is atmospheric and its hinged hatch is square, find the force F required to open it. Assume ρ is 1000 kg/m^3 and g = 9.81 m/s/s.

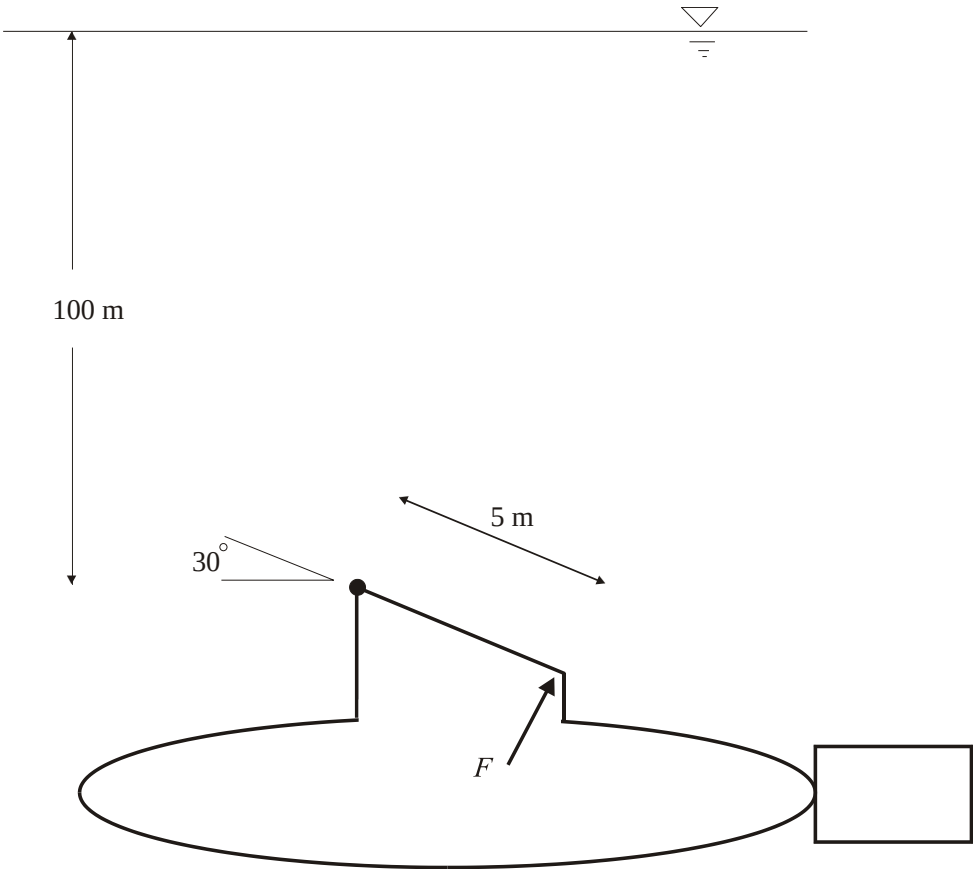

Integral mass conservation equation:

$$0 = \frac{\partial}{\partial t}\int_{CV} \rho d\forall + \int_{CS} \rho \vec{V}.d\vec{A}$$

Integral momentum equation:

$$\vec{F} = \vec{F}_s + \vec{F}_B = \frac{\partial}{\partial t}\int_{CV} \vec{V}\rho d\forall + \int_{CS} \vec{V}\rho\vec{V}.d\vec{A}$$

Integral angular momentum equation:

$$\sum(\vec{r}\times\vec{F}) = \frac{\partial}{\partial t}\int_{CV} (\vec{r}\times\vec{V})\rho d\forall + \int_{CS} (\vec{r}\times\vec{V})\rho\vec{V}\cdot d\vec{A}$$

The Equation of Continuity

Rectangular Coordinates (x, y, z):

$$\frac{\partial \rho}{\partial t} + \frac{\partial}{\partial x}(\rho v_x) + \frac{\partial}{\partial y}(\rho v_y) + \frac{\partial}{\partial z}(\rho v_z) = 0$$

Cylindrical Coordinates (r, θ, z):

$$\frac{\partial \rho}{\partial t} + \frac{1}{r}\frac{\partial}{\partial r}(\rho r v_r) + \frac{1}{r}\frac{\partial}{\partial \theta}(\rho v_\theta) + \frac{\partial}{\partial z}(\rho v_z) = 0$$

Momentum Equations for Incompressible Newtonian Fluid with Constant Viscosity (μ)

Rectangular Coordinates (x, y, z):

$$\rho\left(\frac{\partial v_x}{\partial t} + v_x\frac{\partial v_x}{\partial x} + v_y\frac{\partial v_x}{\partial y} + v_z\frac{\partial v_x}{\partial z}\right) = \mu\left[\frac{\partial^2 v_x}{\partial x^2} + \frac{\partial^2 v_x}{\partial y^2} + \frac{\partial^2 v_x}{\partial z^2}\right] - \frac{\partial p}{\partial x} + \rho g_x$$

$$\rho\left(\frac{\partial v_y}{\partial t} + v_x\frac{\partial v_y}{\partial x} + v_y\frac{\partial v_y}{\partial y} + v_z\frac{\partial v_y}{\partial z}\right) = \mu\left[\frac{\partial^2 v_y}{\partial x^2} + \frac{\partial^2 v_y}{\partial y^2} + \frac{\partial^2 v_y}{\partial z^2}\right] - \frac{\partial p}{\partial y} + \rho g_y$$

$$\rho\left(\frac{\partial v_z}{\partial t} + v_x\frac{\partial v_z}{\partial x} + v_y\frac{\partial v_z}{\partial y} + v_z\frac{\partial v_z}{\partial z}\right) = \mu\left[\frac{\partial^2 v_z}{\partial x^2} + \frac{\partial^2 v_z}{\partial y^2} + \frac{\partial^2 v_z}{\partial z^2}\right] - \frac{\partial p}{\partial z} + \rho g_z$$

Cylindrical Coordinates (r, θ, z):

$$\rho\left(\frac{\partial v_r}{\partial t} + v_r\frac{\partial v_r}{\partial r} + \frac{v_\theta}{r}\frac{\partial v_r}{\partial \theta} - \frac{v_\theta^2}{r} + v_z\frac{\partial v_r}{\partial z}\right) = \mu\left[\frac{\partial}{\partial r}\left(\frac{1}{r}\frac{\partial}{\partial r}(r v_r)\right) + \frac{1}{r^2}\frac{\partial^2 v_r}{\partial \theta^2} + \frac{\partial^2 v_r}{\partial z^2} - \frac{2}{r^2}\frac{\partial v_\theta}{\partial \theta}\right] - \frac{\partial p}{\partial r} + \rho g_r$$

$$\rho\left(\frac{\partial v_\theta}{\partial t} + v_r\frac{\partial v_\theta}{\partial r} + \frac{v_\theta}{r}\frac{\partial v_\theta}{\partial \theta} + \frac{v_r v_\theta}{r} + v_z\frac{\partial v_\theta}{\partial z}\right) = \mu\left[\frac{\partial}{\partial r}\left(\frac{1}{r}\frac{\partial}{\partial r}(r v_\theta)\right) + \frac{1}{r^2}\frac{\partial^2 v_\theta}{\partial \theta^2} + \frac{\partial^2 v_\theta}{\partial z^2} + \frac{2}{r^2}\frac{\partial v_r}{\partial \theta}\right] - \frac{1}{r}\frac{\partial p}{\partial \theta} + \rho g_\theta$$

$$\rho\left(\frac{\partial v_z}{\partial t} + v_r\frac{\partial v_z}{\partial r} + \frac{v_\theta}{r}\frac{\partial v_z}{\partial \theta} + v_z\frac{\partial v_z}{\partial z}\right) = \mu\left[\frac{1}{r}\frac{\partial}{\partial r}\left(r\frac{\partial v_z}{\partial r}\right) + \frac{1}{r^2}\frac{\partial^2 v_z}{\partial \theta^2} + \frac{\partial^2 v_z}{\partial z^2}\right] - \frac{\partial p}{\partial z} + \rho g_z$$

Table C-3 Components of the Stress Tensor for Newtonian Fluids

Rectangular Coordinates (x, y, z)	Cylindrical Coordinates (r, θ, z)
$\tau_{xx} = \mu\left[2\frac{\partial v_x}{\partial x} - \frac{2}{3}(\nabla \cdot \mathbf{v})\right]$	$\tau_{rr} = \mu\left[2\frac{\partial v_r}{\partial r} - \frac{2}{3}(\nabla \cdot \mathbf{v})\right]$
$\tau_{yy} = \mu\left[2\frac{\partial v_y}{\partial y} - \frac{2}{3}(\nabla \cdot \mathbf{v})\right]$	$\tau_{\theta\theta} = \mu\left[2\left(\frac{1}{r}\frac{\partial v_\theta}{\partial \theta} + \frac{v_r}{r}\right) - \frac{2}{3}(\nabla \cdot \mathbf{v})\right]$
$\tau_{zz} = \mu\left[2\frac{\partial v_z}{\partial z} - \frac{2}{3}(\nabla \cdot \mathbf{v})\right]$	$\tau_{zz} = \mu\left[2\frac{\partial v_z}{\partial z} - \frac{2}{3}(\nabla \cdot \mathbf{v})\right]$
$\tau_{xy} = \tau_{yx} = \mu\left[\frac{\partial v_x}{\partial y} + \frac{\partial v_y}{\partial x}\right]$	$\tau_{r\theta} = \tau_{\theta r} = \mu\left[r\frac{\partial}{\partial r}\left(\frac{v_\theta}{r}\right) + \frac{1}{r}\frac{\partial v_r}{\partial \theta}\right]$
$\tau_{yz} = \tau_{zy} = \mu\left[\frac{\partial v_y}{\partial z} + \frac{\partial v_z}{\partial y}\right]$	$\tau_{\theta z} = \tau_{z\theta} = \mu\left[\frac{\partial v_\theta}{\partial z} + \frac{1}{r}\frac{\partial v_z}{\partial \theta}\right]$
$\tau_{zx} = \tau_{xz} = \mu\left[\frac{\partial v_z}{\partial x} + \frac{\partial v_x}{\partial z}\right]$	$\tau_{zr} = \tau_{rz} = \mu\left[\frac{\partial v_z}{\partial r} + \frac{\partial v_r}{\partial z}\right]$
$(\nabla \cdot \mathbf{v}) = \frac{\partial v_x}{\partial x} + \frac{\partial v_y}{\partial y} + \frac{\partial v_z}{\partial z}$	$(\nabla \cdot \mathbf{v}) = \frac{1}{r}\frac{\partial}{\partial r}(r v_r) + \frac{1}{r}\frac{\partial v_\theta}{\partial \theta} + \frac{\partial v_z}{\partial z}$

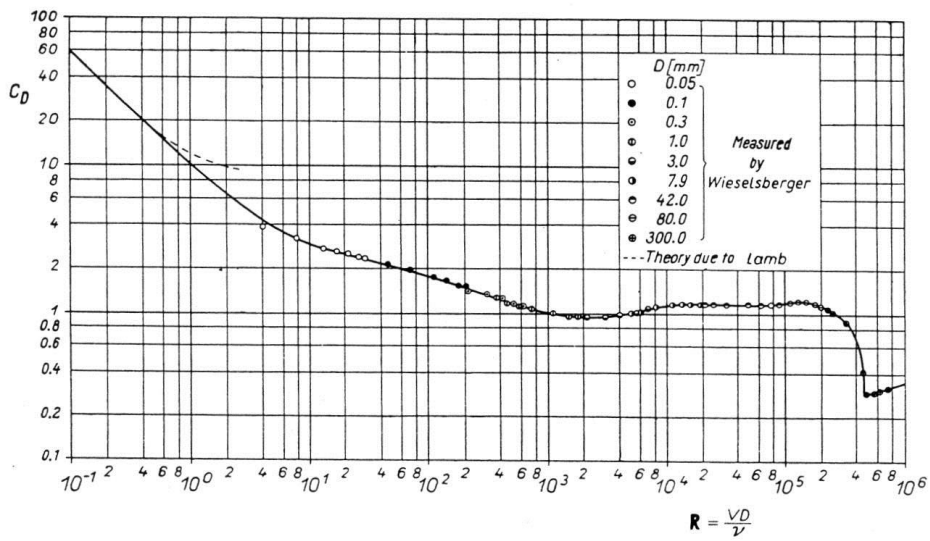

Fig. 1.4. Drag coefficient for circular cylinders as a function of the Reynolds number

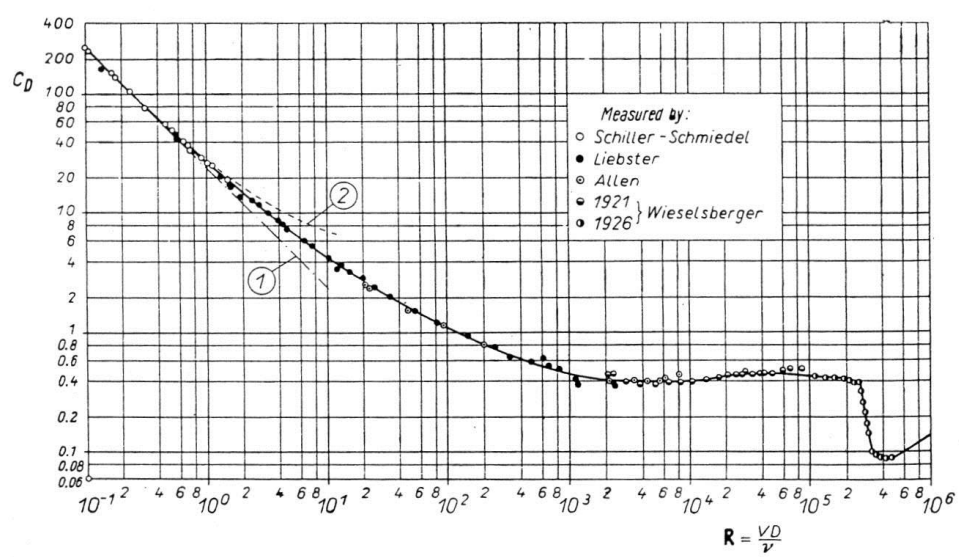

Curve (1), Stokes' theory: $C_D = 24/\mathbf{R}$

Fig. 1.5. Drag coefficient for spheres as a function of the Reynolds number
Curve (1): Stokes's theory, eqn. (6.10); curve (2): Oseen's theory, eqn. (6.13)